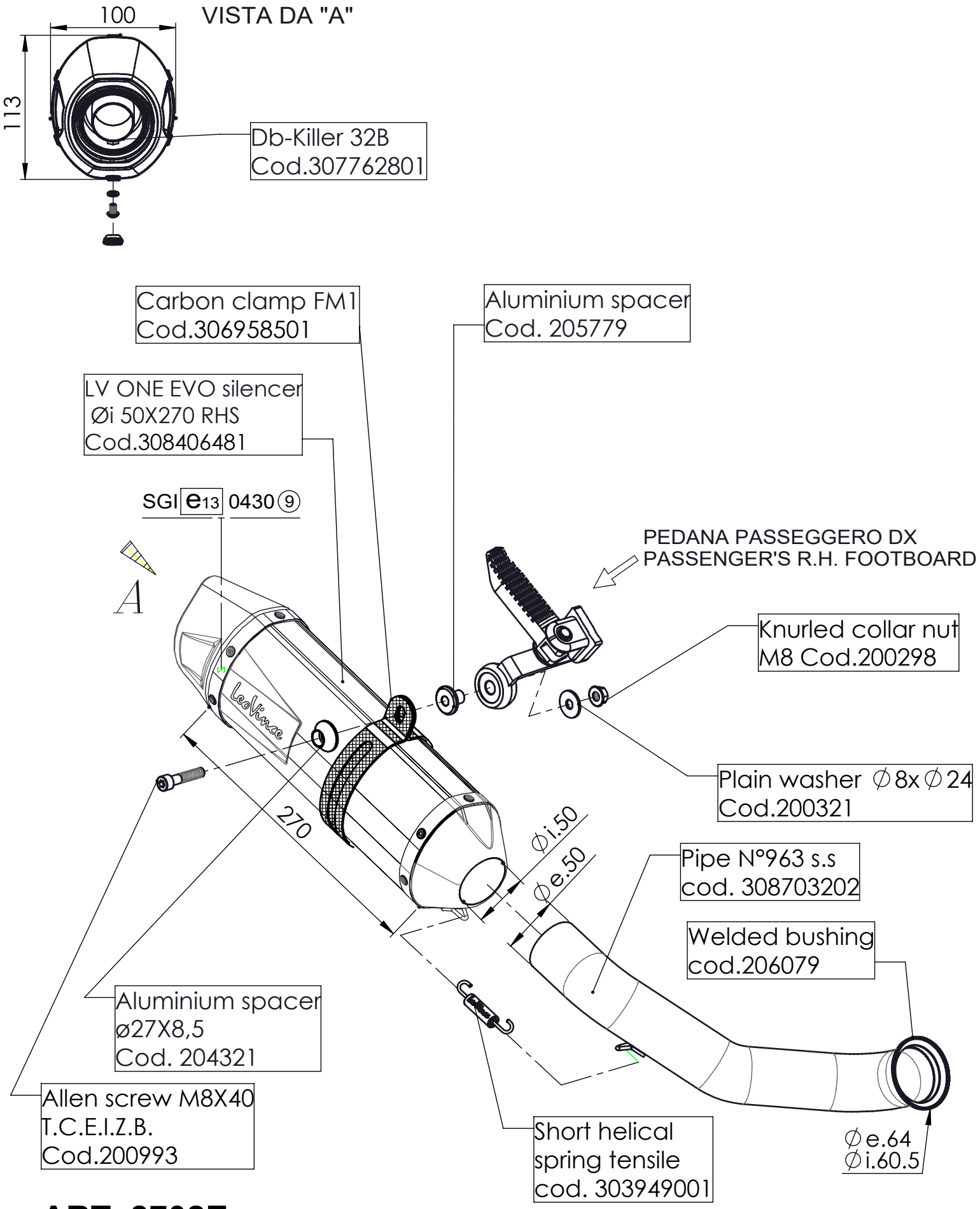

ART. 8702E

KTM 690 DUKE i.e.

SLIP-ON - LV ONE - STAINLESS STEEL - APPROVED