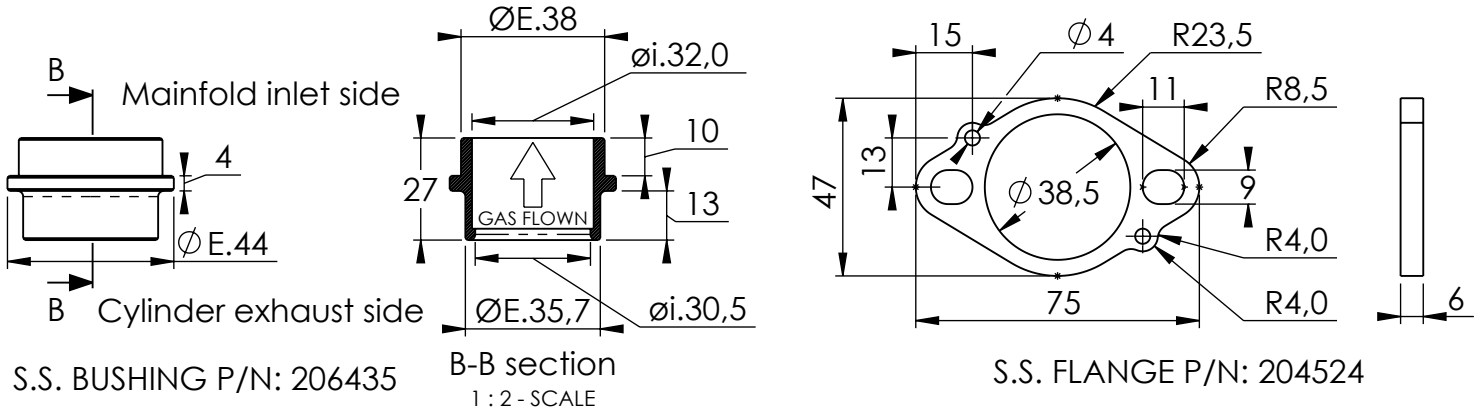

S.S. BUSHING P/N: 206435

B-B section
1 : 2 - SCALE

S.S. FLANGE P/N: 204524

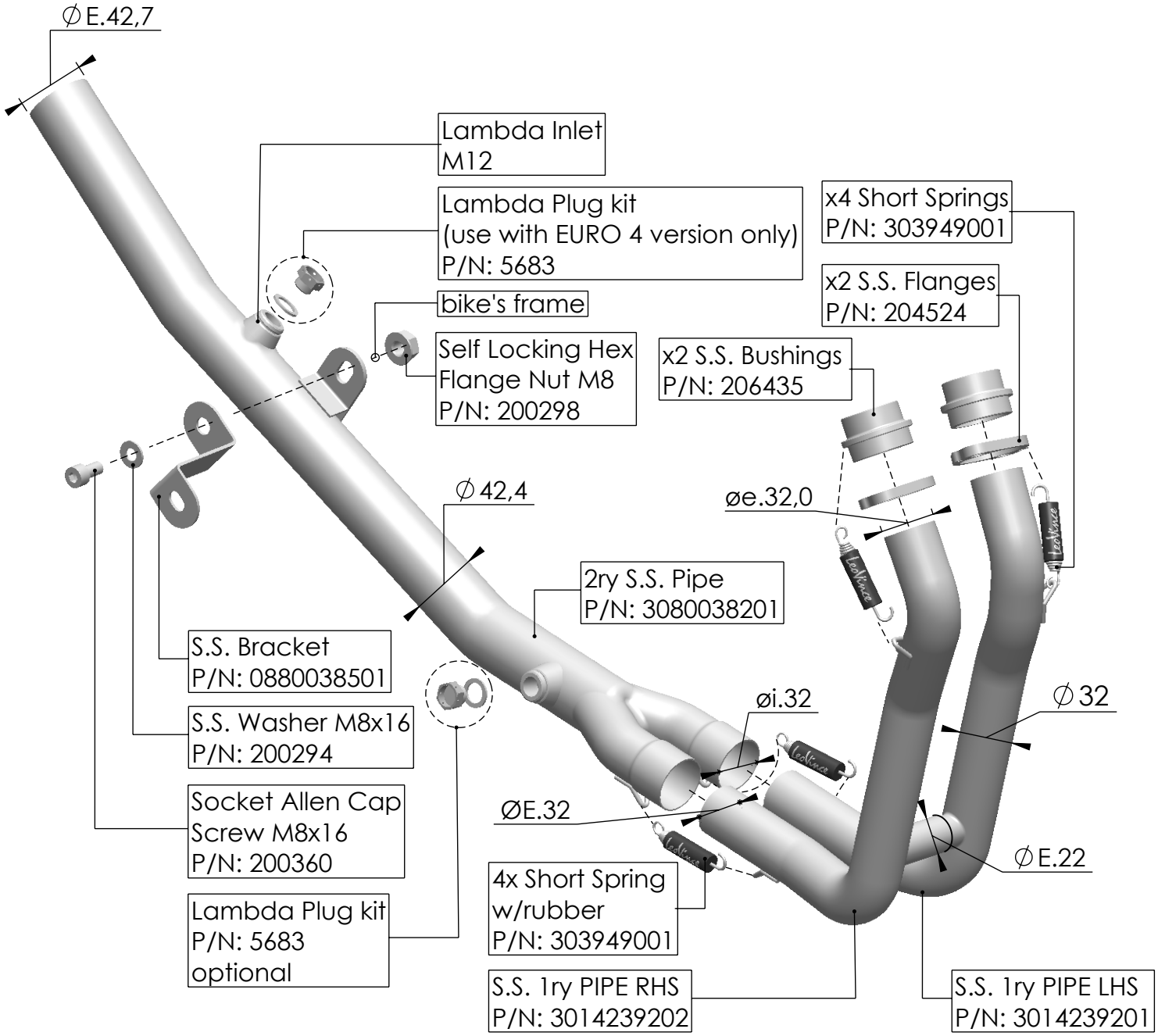

ART. 80038

KAWASAKI NINJA 400 / Z 400
(compatible both with stock exhaust and LeoVince slip-on)

HEADER PIPES 2/1 - STAINLESS STEEL