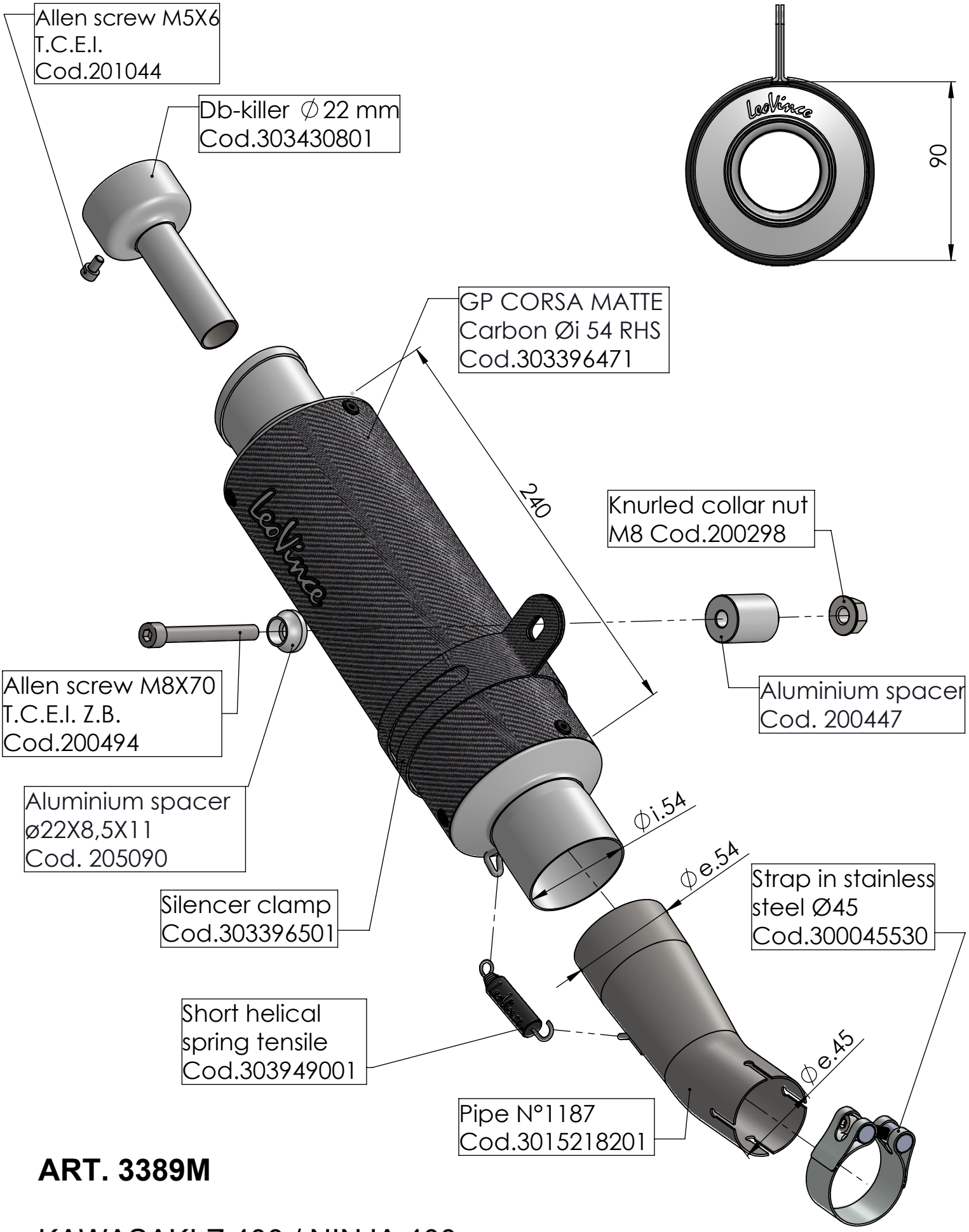

ART. 3389M

KAWASAKI Z 400 / NINJA 400

SLIP-ON - GP CORSA MATTE - CARBON