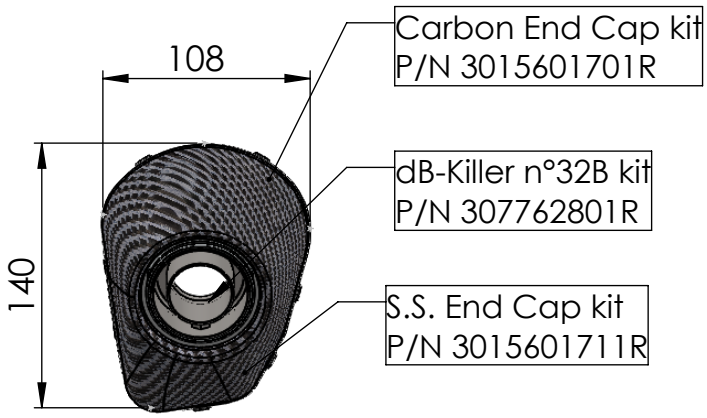

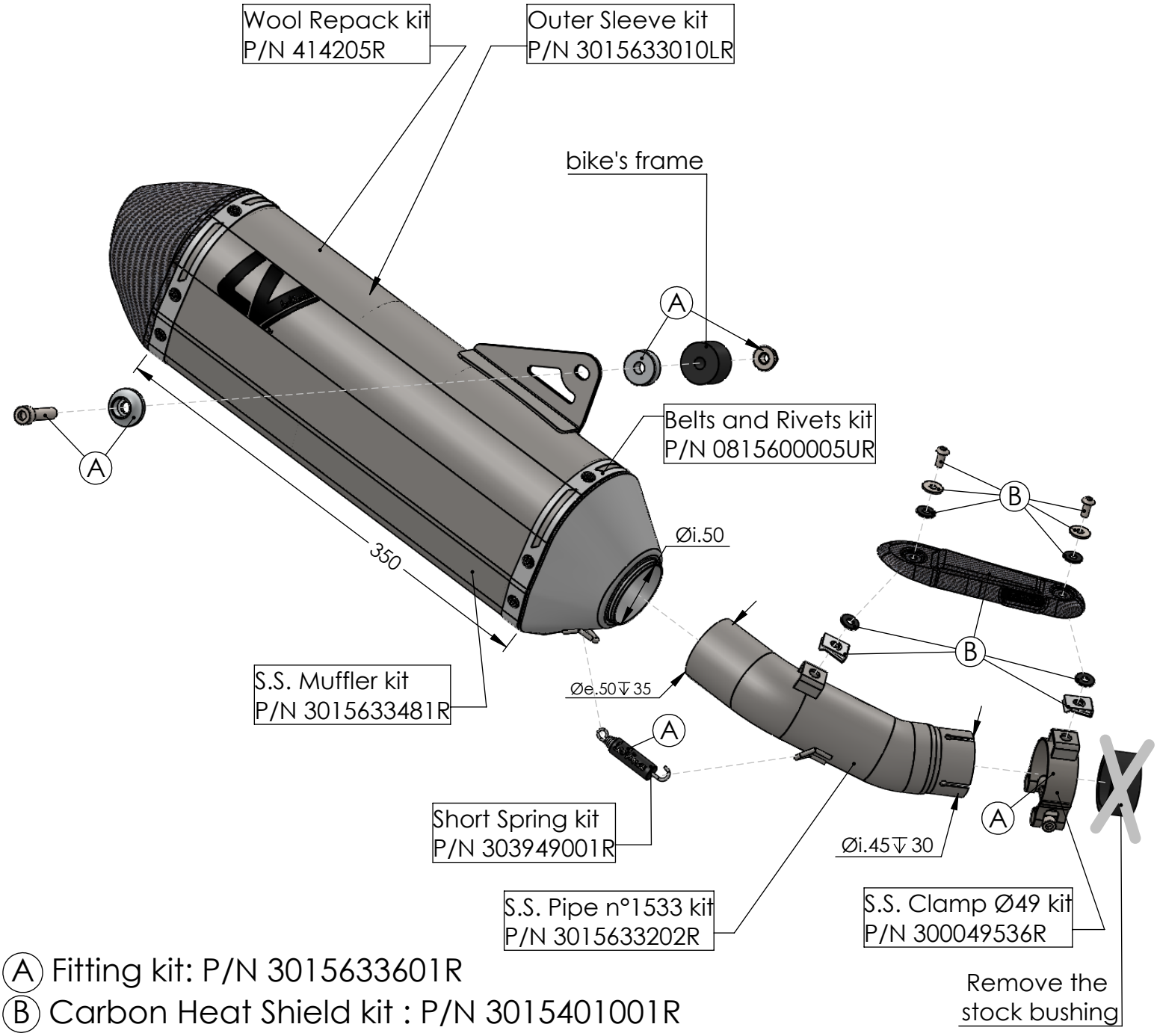

Ⓐ Fitting kit: P/N 3015633601R
Ⓑ Carbon Heat Shield kit : P/N 3015401001R

ART. 15633U - SPARE PARTS

MOTO MORINI X-CAPE 700

SLIP-ON LV-14 STAINLESS STEEL