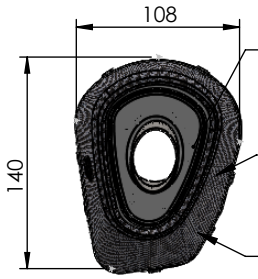

dB-Killer n°79 kit
P/N 3015600801R

S.S. End Cap kit
P/N 3015600711R

Carbon End Cap kit
P/N 3015600701R

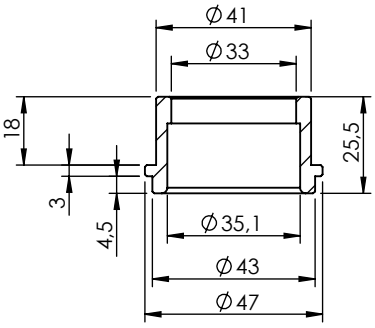

S.S. Bushing
P/N 204833R

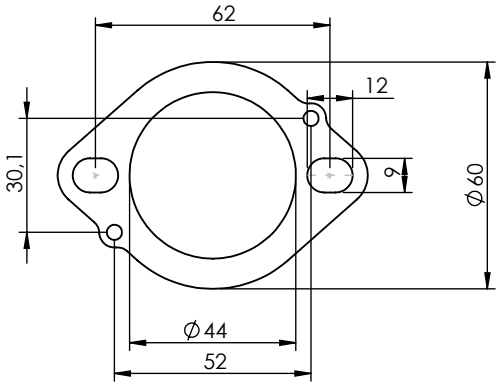

S.S. Flange 112A
P/N 204569R sp. 5mm

Outer Sleeve kit
P/N 0815600007LR

Wool Repack kit
P/N 414205R

WARNING

Fitting this exhaust system it is advisable to optimize the carburation by remapping the stock ECU or by adopting an additional ECU unit.

S.S. Bracket kit
P/N 3015631562R
USE ONLY ON EURO 5+ MODELS

S.S. Bracket kit
P/N 3015631563R
USE ONLY ON EURO 5 MODELS

bike's frame

270

S.S. Muffler kit
P/N 3015600481UR

Belts and Rivets kit
P/N 0815600005UR

Øi.50

Øe.50↧35

use stock or new gaskets

S.S. Bracket kit
P/N 3015631561R

bike's frame

Short Spring kit
P/N 303949001R

Øi.50

Øe.50↧35

Øe.35↧20

INCLUDED
O2 Sensor Plug
P/N 5684

S.S. Final Pipe kit
P/N 3015631204R

OPTIONAL
O2 Sensor Plug
P/N 5684

S.S. Secondary Pipe kit
P/N 3015632202R

Øi.38

Øe.38

Plastic Clamp kit
P/N 402489R

Ⓐ Primary Pipes kit: P/N 3014349203R
Ⓑ Fitting kit: P/N 3015631601R
Ⓒ Carbon Bracket kit: P/N 3015602562R
Ⓓ Carbon Heat Shield kit: P/N 3015401001R

ART. 15632U - SPARE PARTS

YAMAHA MT-07
(also fits 35kW version) (Attention! Installation on vehicles equipped with dual lambda sensors may cause the "Check Engine" light to come on)

FULL SYSTEM LV-14R STAINLESS STEEL

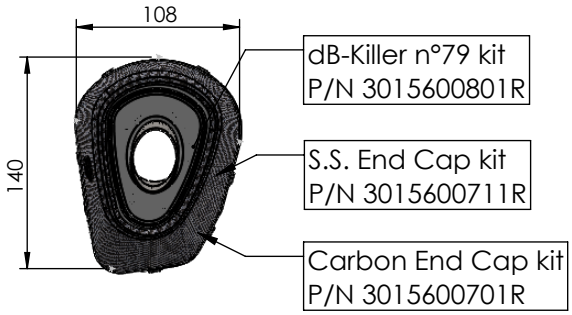

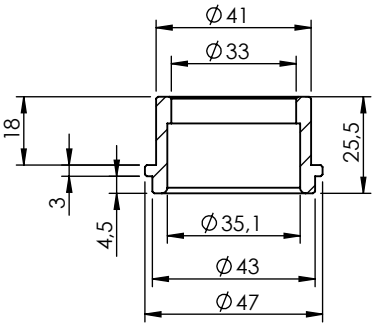

S.S. Bushing
P/N 204833R

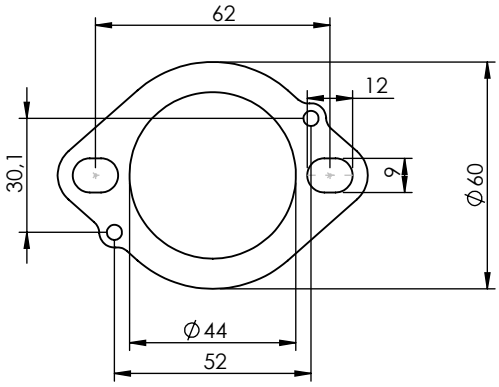

S.S. Flange 112A
P/N 204569R sp. 5mm

WARNING
Fitting this exhaust system it is advisable to optimize the carburation by remapping the stock ECU or by adopting an additional ECU unit.

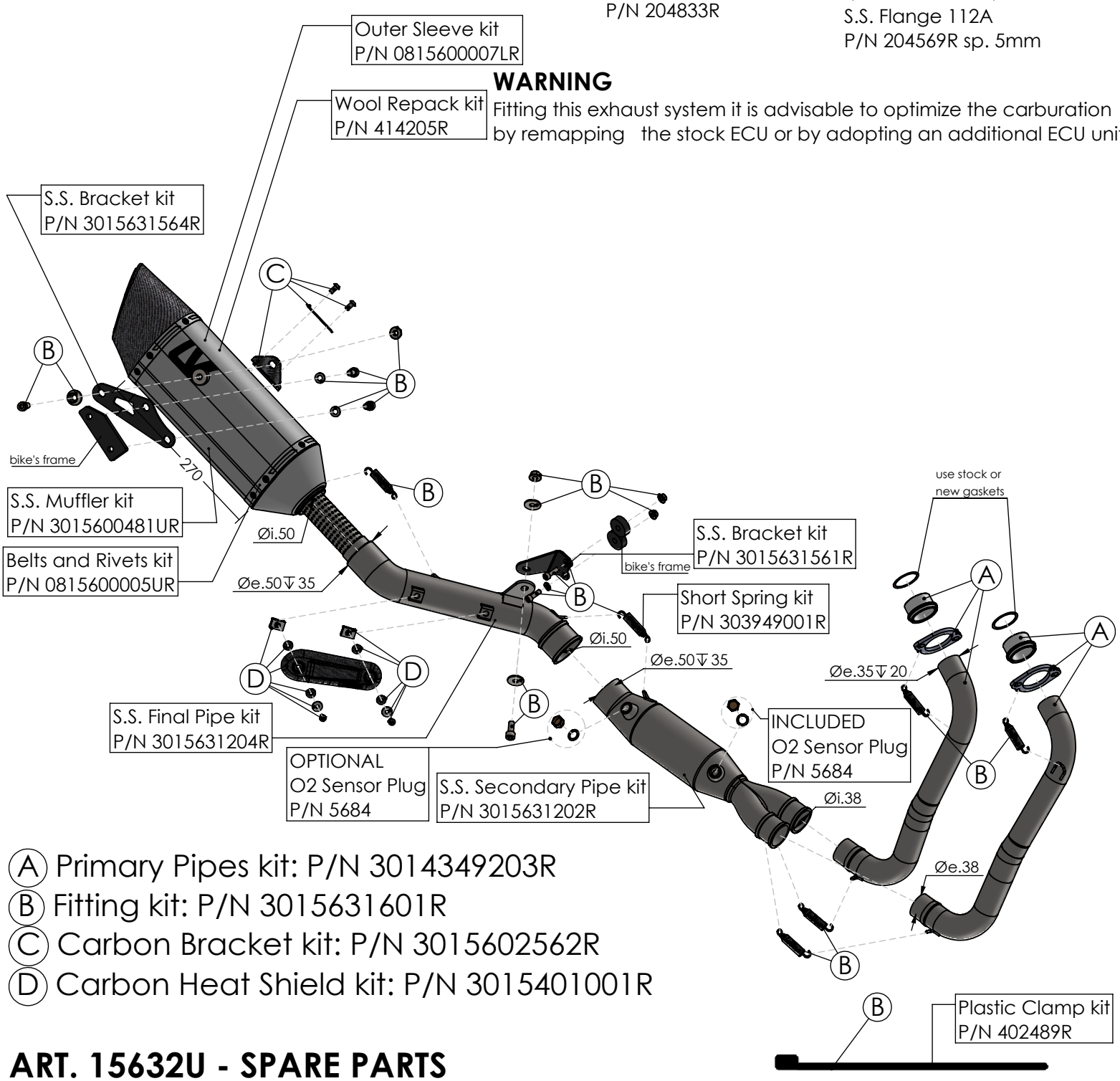

Ⓐ Primary Pipes kit: P/N 3014349203R
Ⓑ Fitting kit: P/N 3015631601R
Ⓒ Carbon Bracket kit: P/N 3015602562R
Ⓓ Carbon Heat Shield kit: P/N 3015401001R

ART. 15632U - SPARE PARTS

YAMAHA TRACER 7(Fit with original panniers **ONLY 2020-2024 VERSIONS**) (also fits 35kW version) (Attention! Installation on vehicles equipped with dual lambda sensors may cause the "Check Engine" light to come on)

FULL SYSTEM LV-14R STAINLESS STEEL