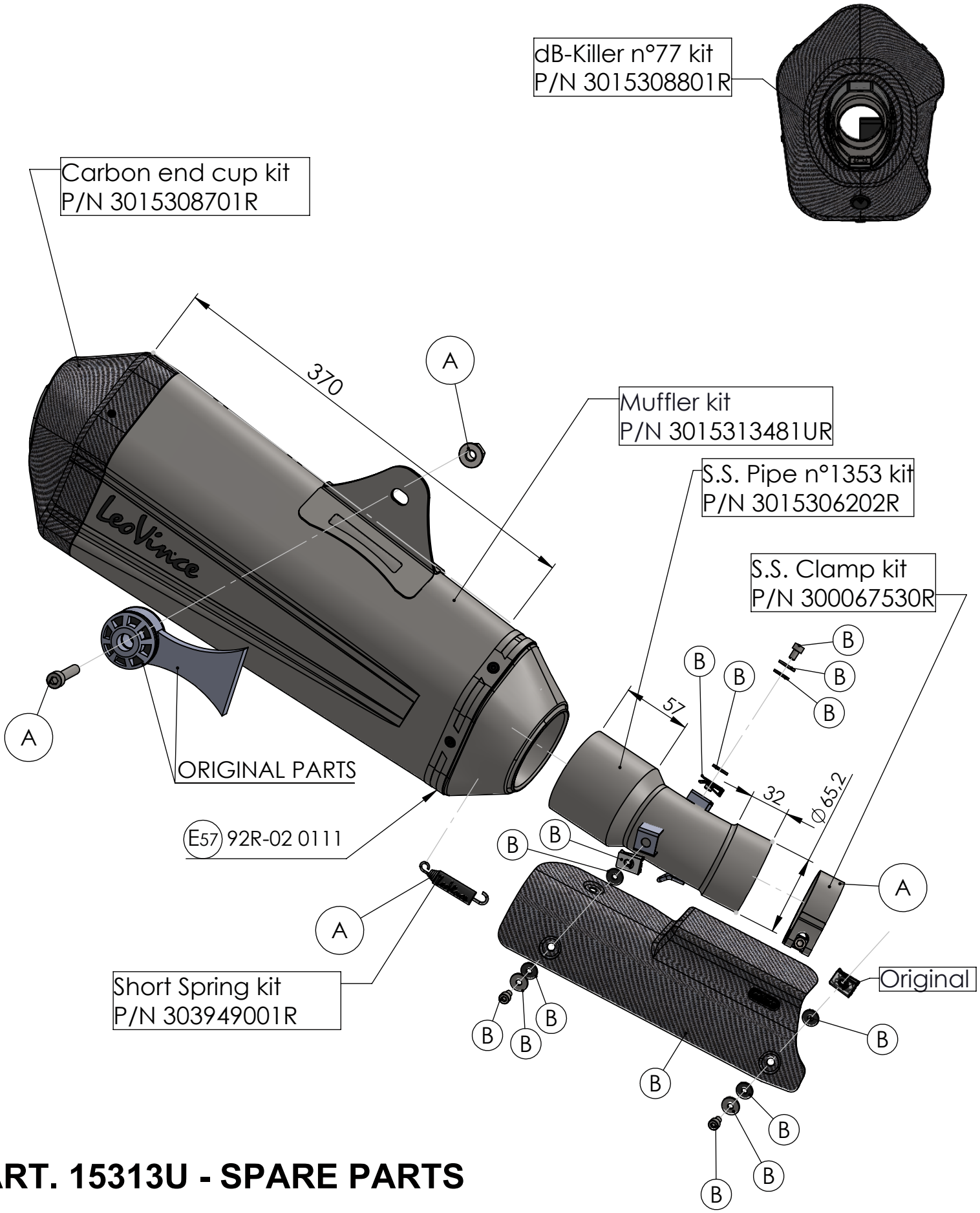

ART. 15313U - SPARE PARTS

BMW R 1250 R / RS
(Fits with original panniers) (Fits with original centre stand)

(A) FITTING KIT cod.3015306601R (B) CARBON COVER KIT cod.3015306001R