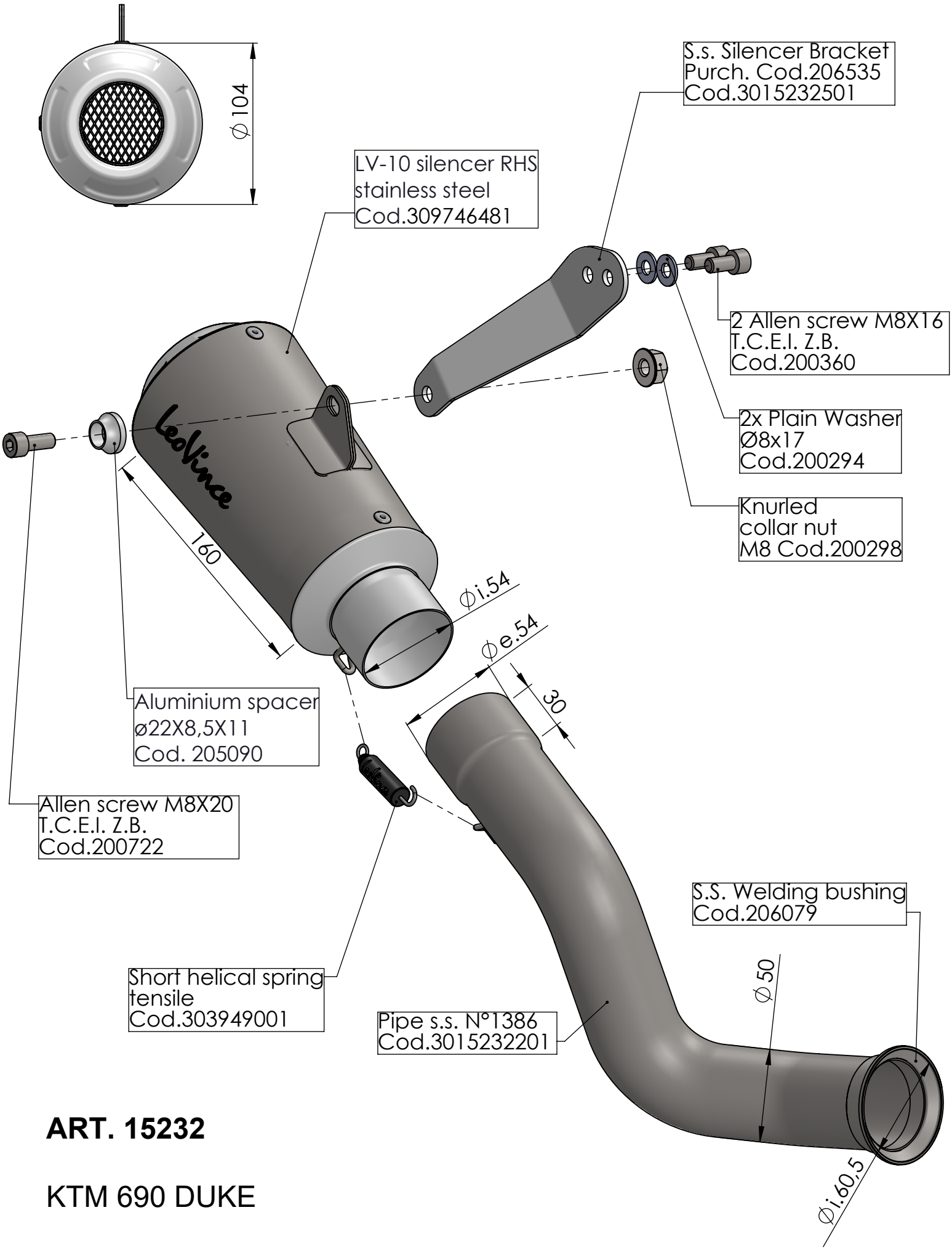

ART. 15232

KTM 690 DUKE

SLIP-ON - LV-10 - STAINLESS STEEL