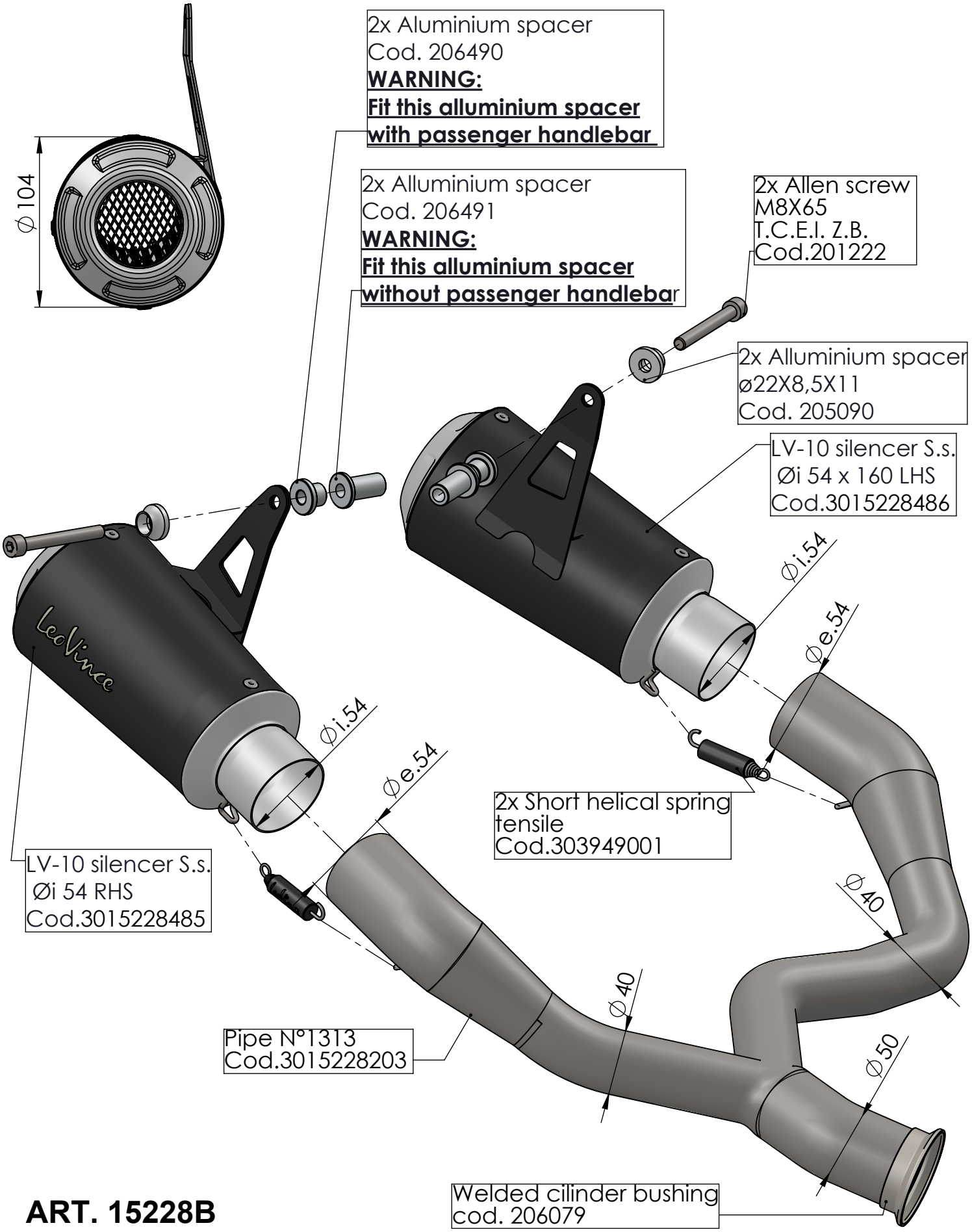

ART. 15228B

KTM 790 DUKE / 790 DUKE L (A2) / 890 DUKE/L (A2)/R
(not compatible with original panniers)

SLIP-ON - LV-10 - BLACK