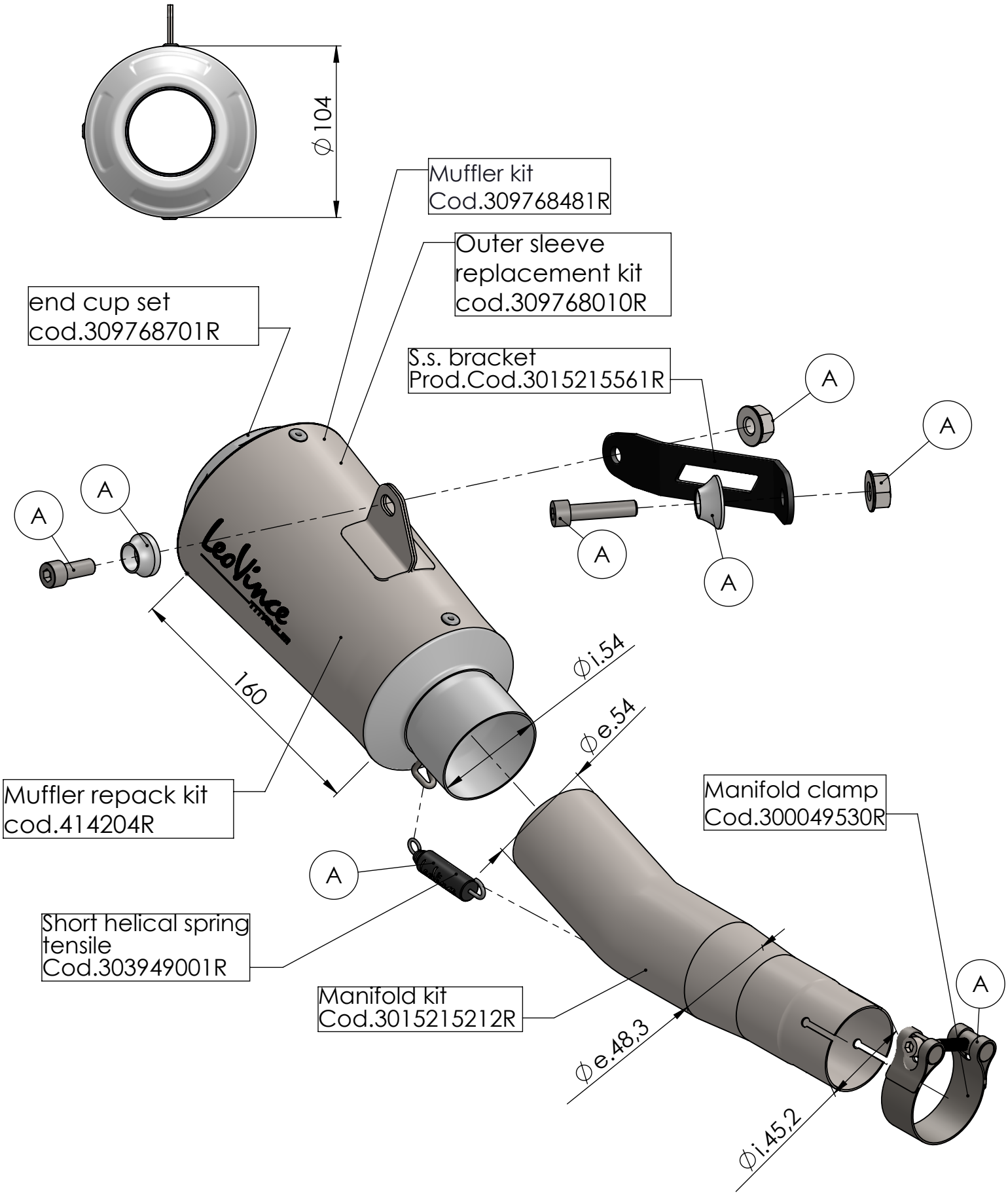

ART. 15215T SPARE PARTS

YAMAHA YZF-R6

Ⓐ FITTING KIT cod.3015215601R