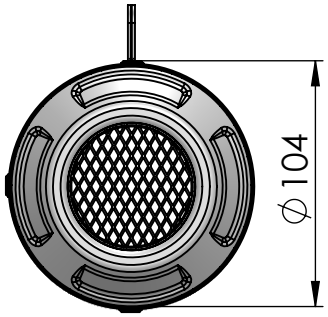

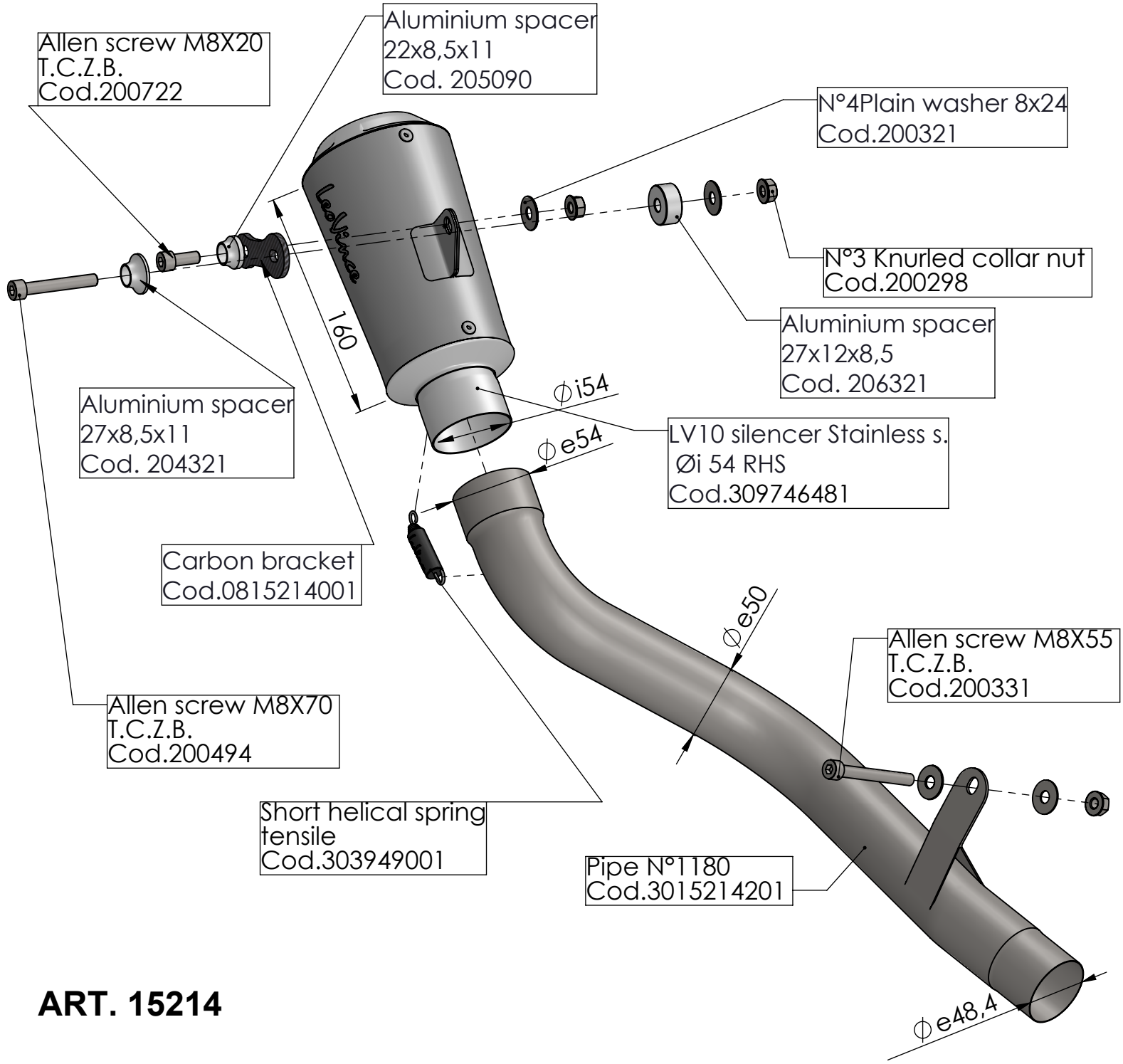

ART. 15214

KAWASAKI Z 800

SLIP-ON - LV 10 - STAINLESS STEEL