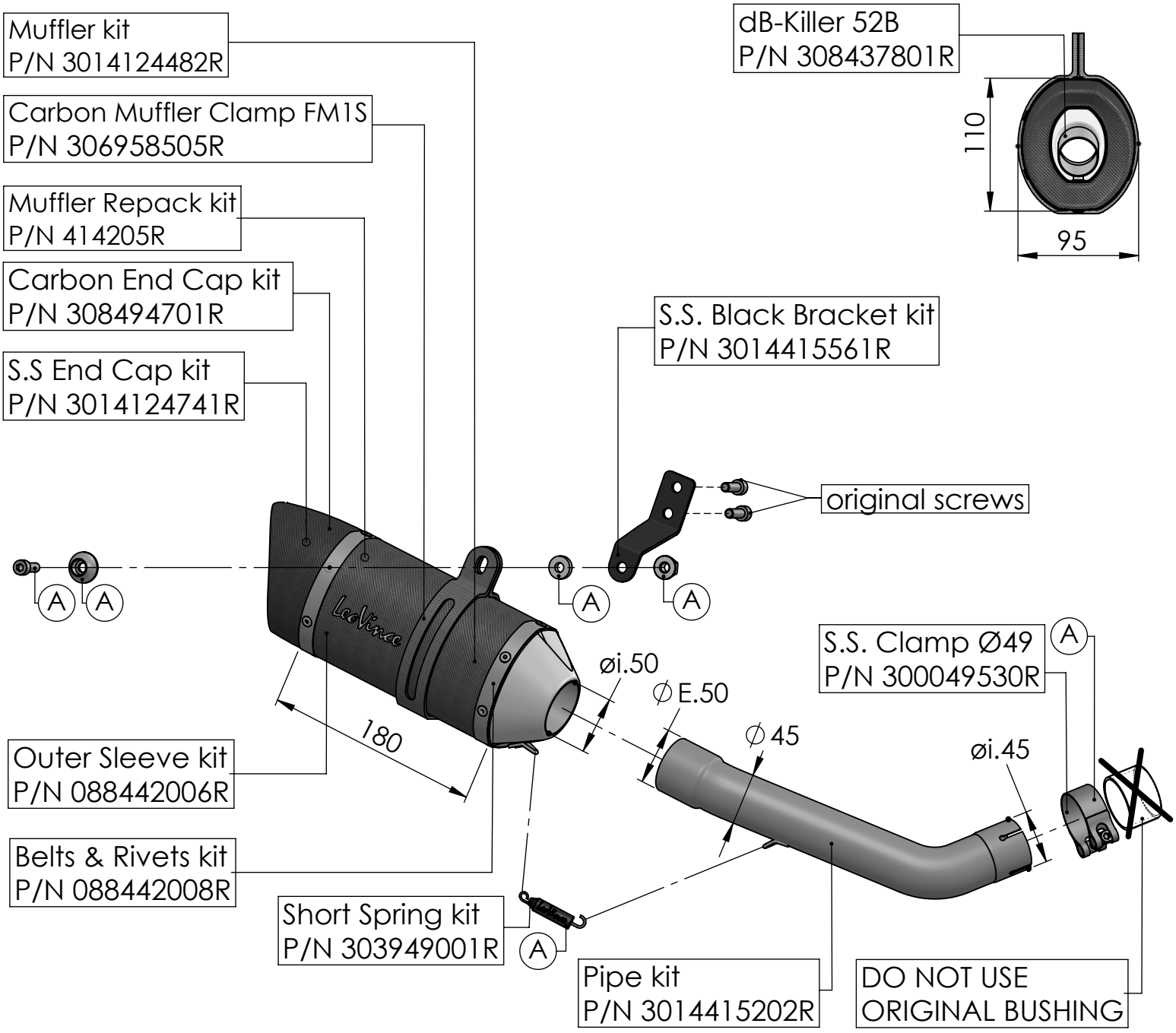

Ⓐ **FITTING KIT** - P/N 3014415601R

ART. 14418E - SPARE PARTS

KTM RC 125 / RC 390

SLIP-ON - LV PRO - CARBON