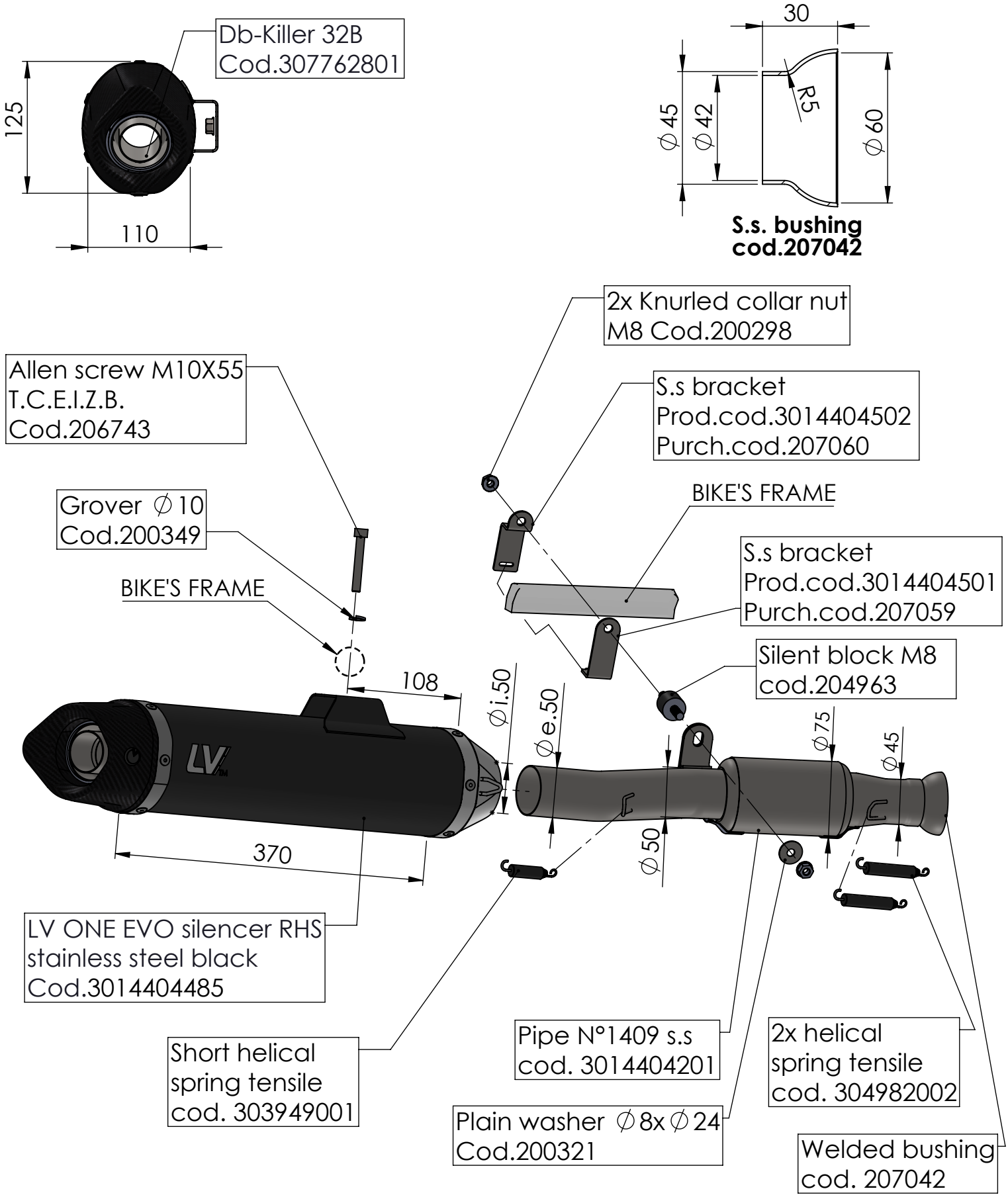

ART. 14404EB

CAN-AM RIKER 600 / 900

SLIP-ON - LV ONE EVO - BLACK