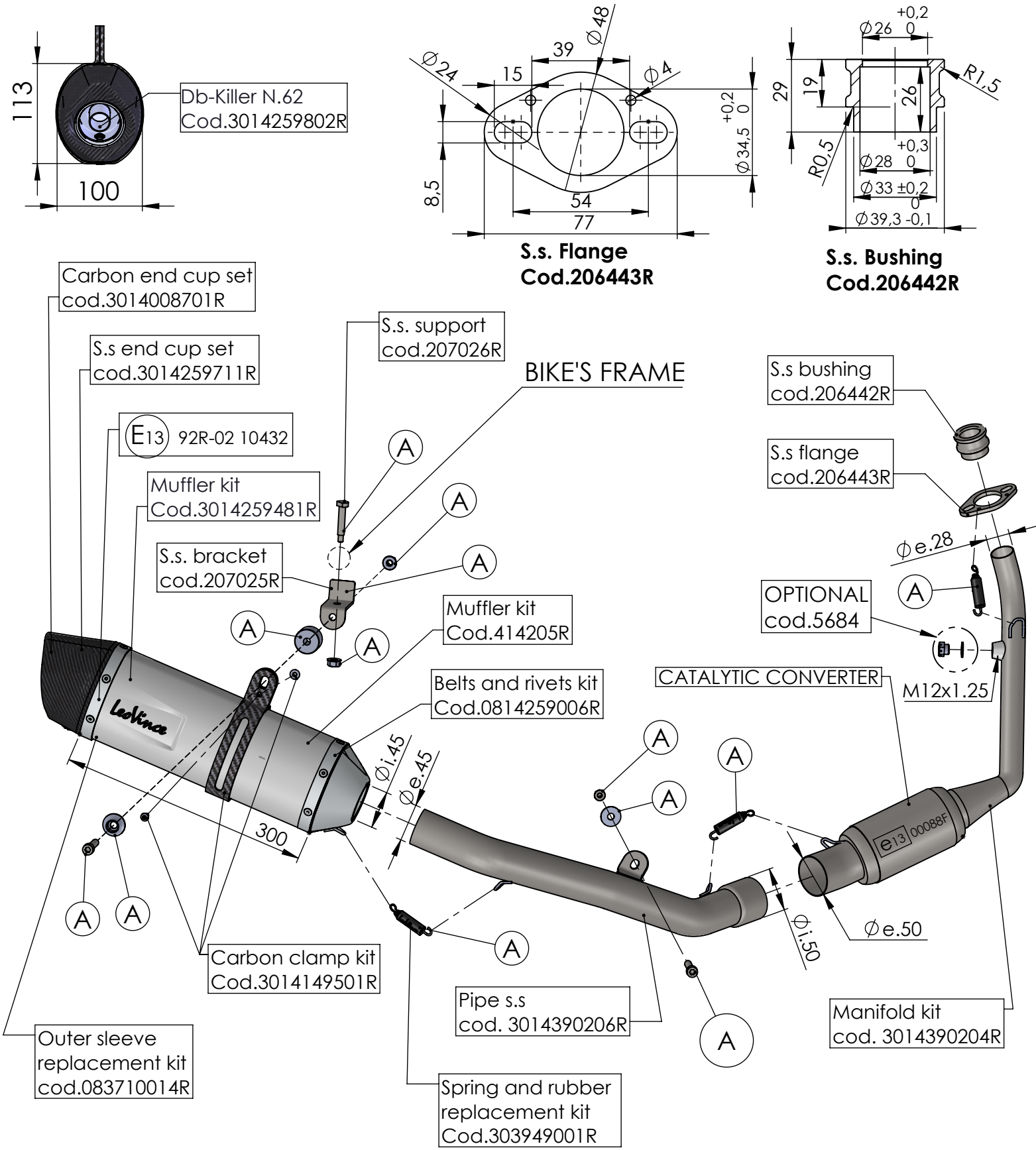

ART. 14390EK - SPARE PARTS

HONDA CB 125 R Neo Sports Café

Ⓐ FITTING KIT cod.3014390601R