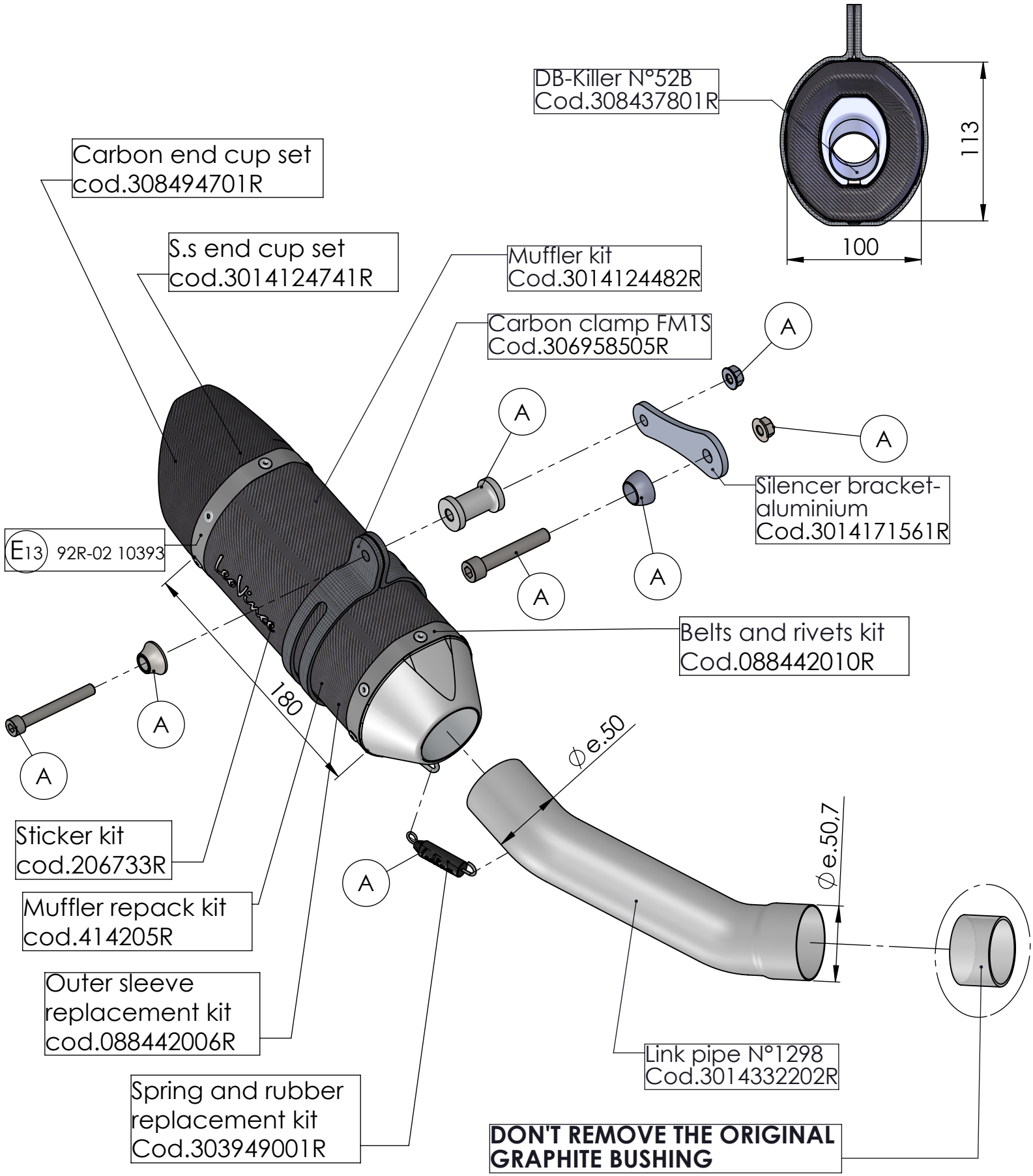

ART. 14333E - SPARE PARTS

KAWASAKI Z900

Ⓐ FITTING KIT cod.3014332601R