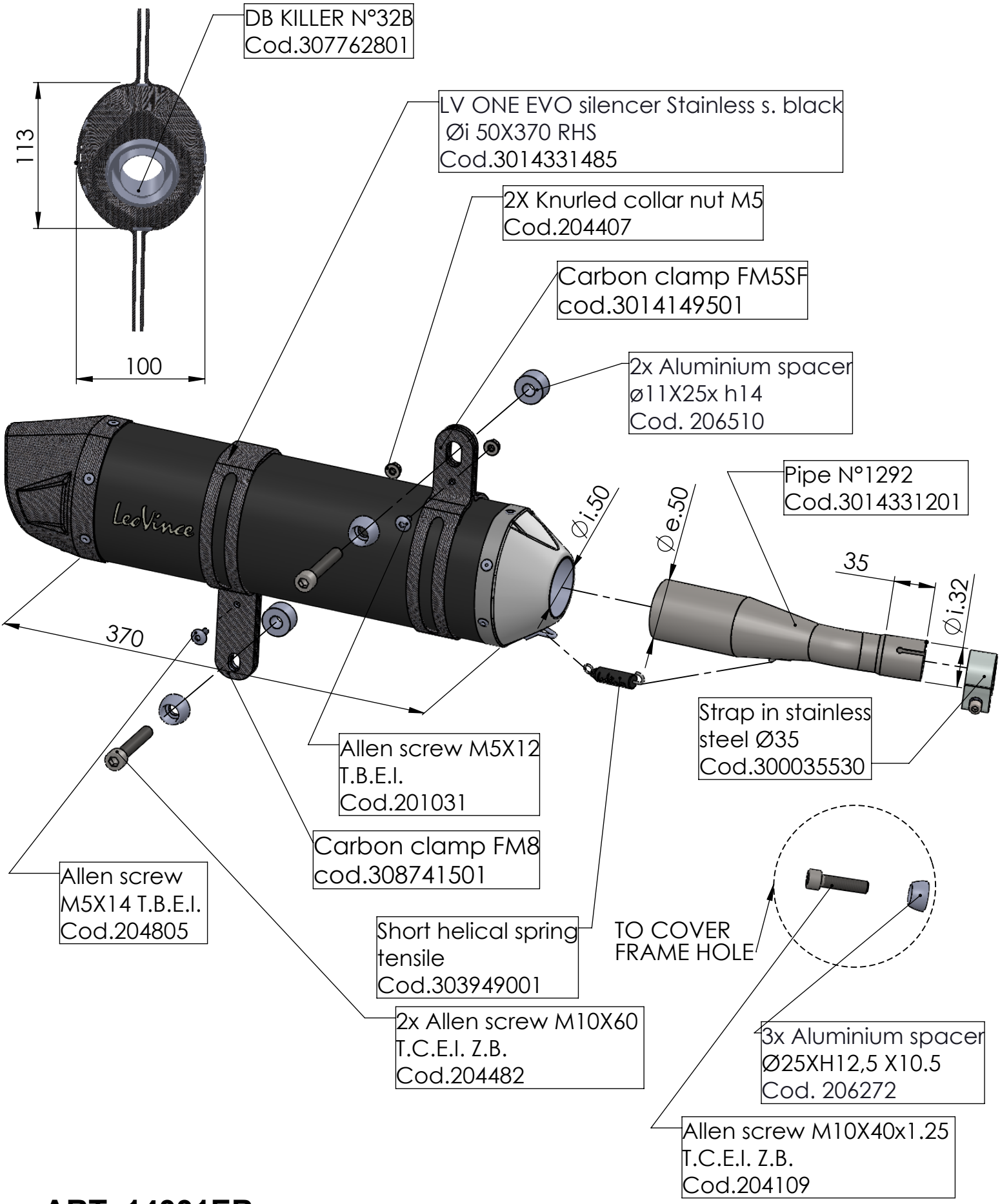

ART. 14331EB

YAMAHA X-MAX 300 / IRON MAX

SLIP ON - LV ONE BLACK - STAINLESS STEEL BLACK