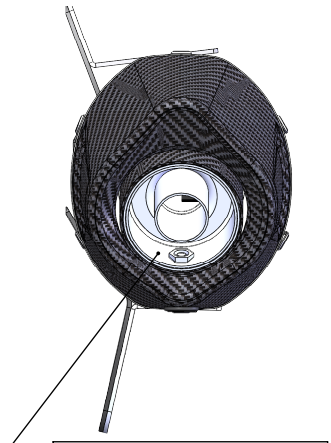

DB-Killer N°63
Cod.3014225801R

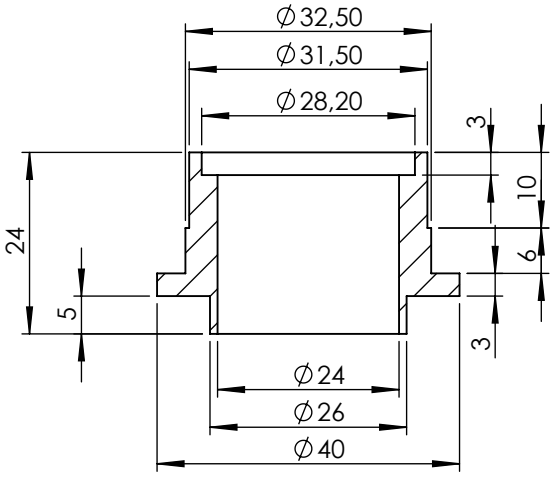

Bushing
Cod. 204640

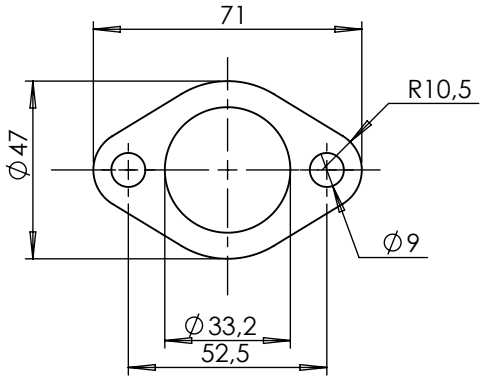

Flange 43E Sp. 5mm
Cod. 206308

Carbon end cap set
Cod.3014008701R

S.s end cap set
Cod.3014259711R

Muffler repack kit
Cod.414205R

Outer sleeve
replacement kit
Cod.3014327010R

Muffler kit
Cod.3014327481R

Belts and rivets kit
Cod.0814326011R

Manifold kit
Cod.3014327202R

Short helical spring
tensile
Cod.303949001R

A

300

Øe.45

Øi.45

Ø25

WARNING

it is advisable to optimize the carburation by remapping
the stock ECU or by adopting an additional ECU unit.

ART.14327E - SPARE PARTS

HONDA PCX 125

Ⓐ FITTING KIT Cod. 3014327601R