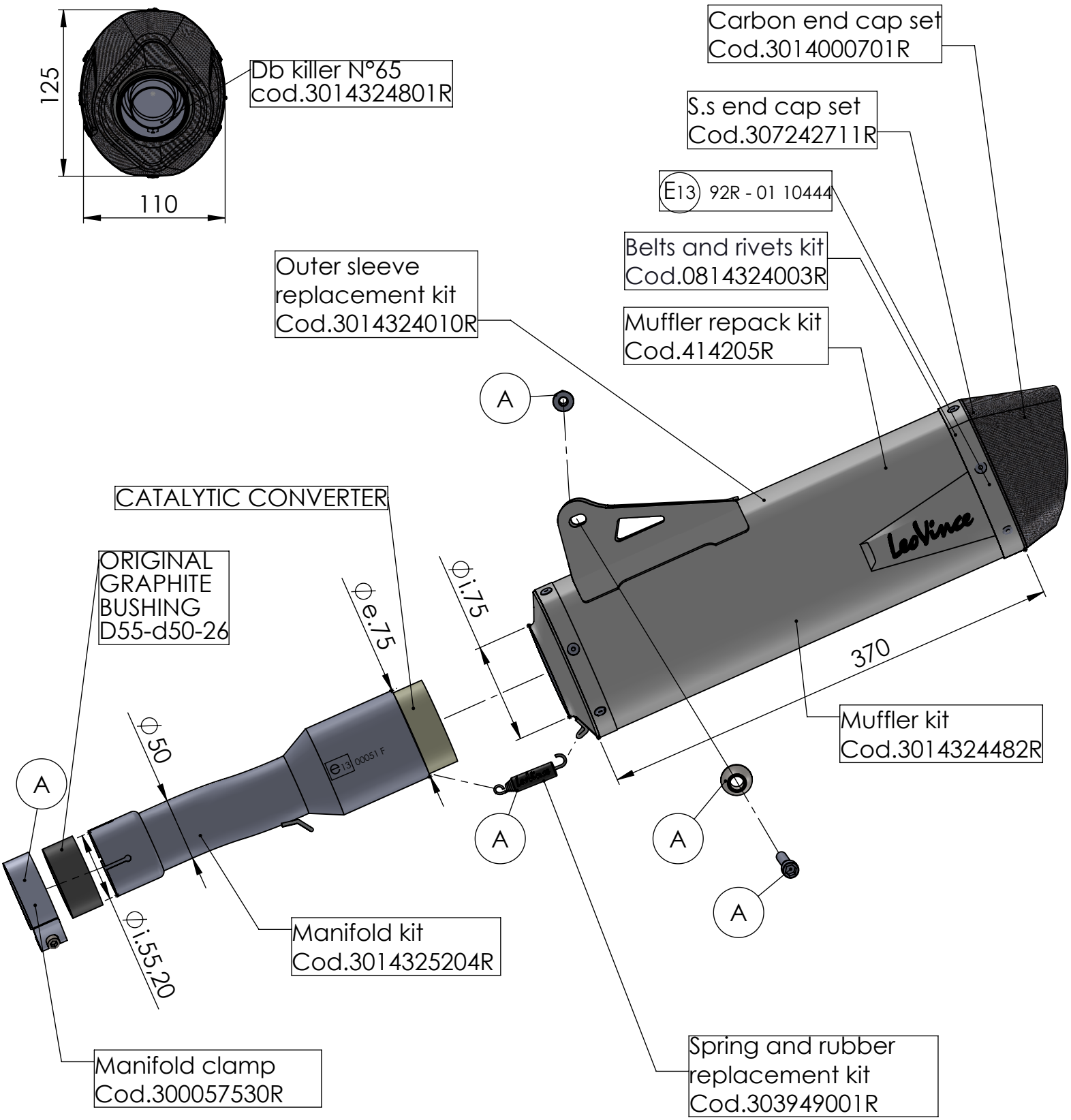

ART. 14325EK - SPARE PARTS

HUSQVARNA 701 ENDURO / ENDURO LR / SUPERMOTO
(also fits 35kW version)

Ⓐ FITTING KIT Cod. 3014066601R