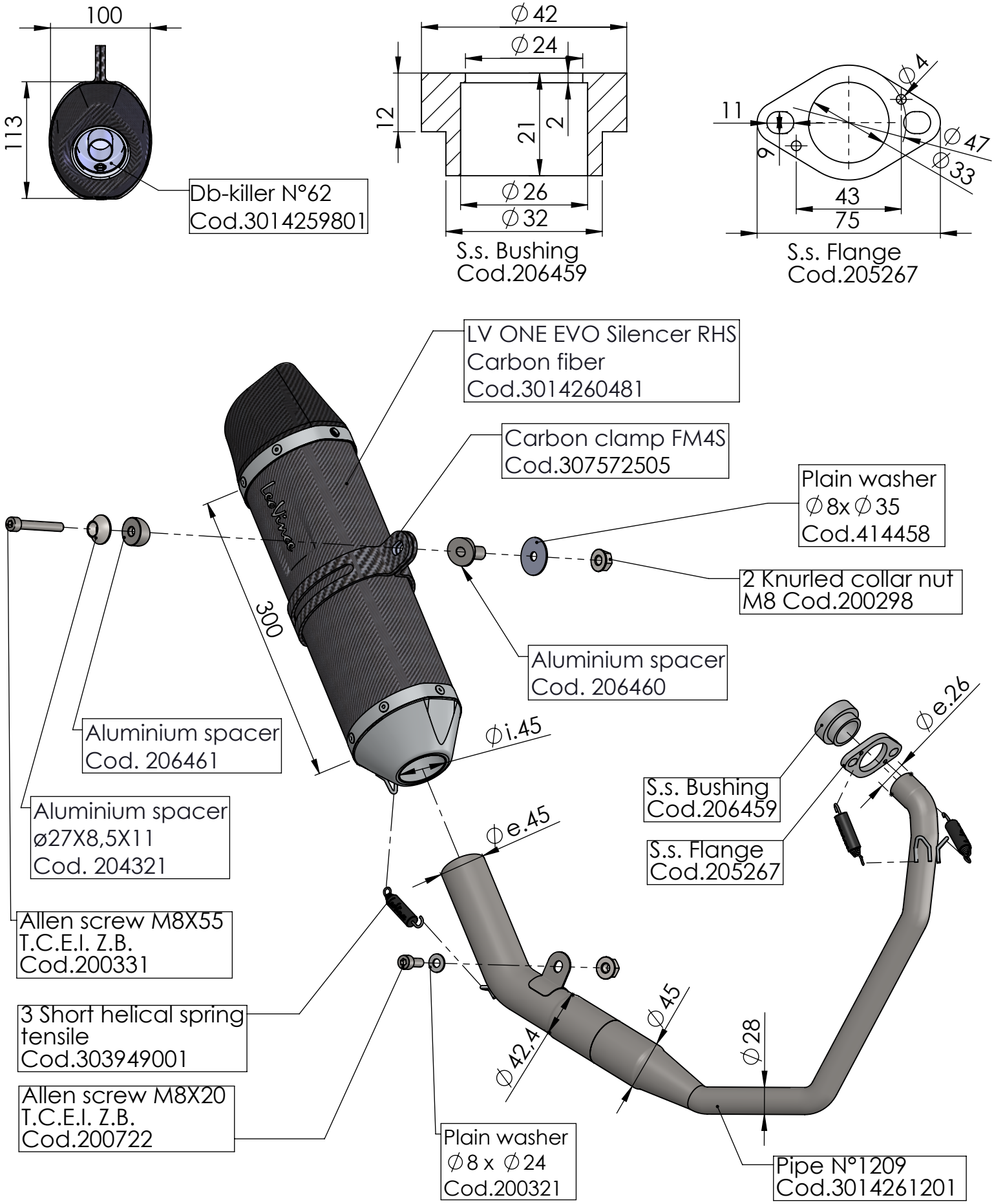

ART. 14262E

YAMAHA MT-125 / YZF-R125

FULL SYSTEM 1/1 - LV ONE EVO - CARBON