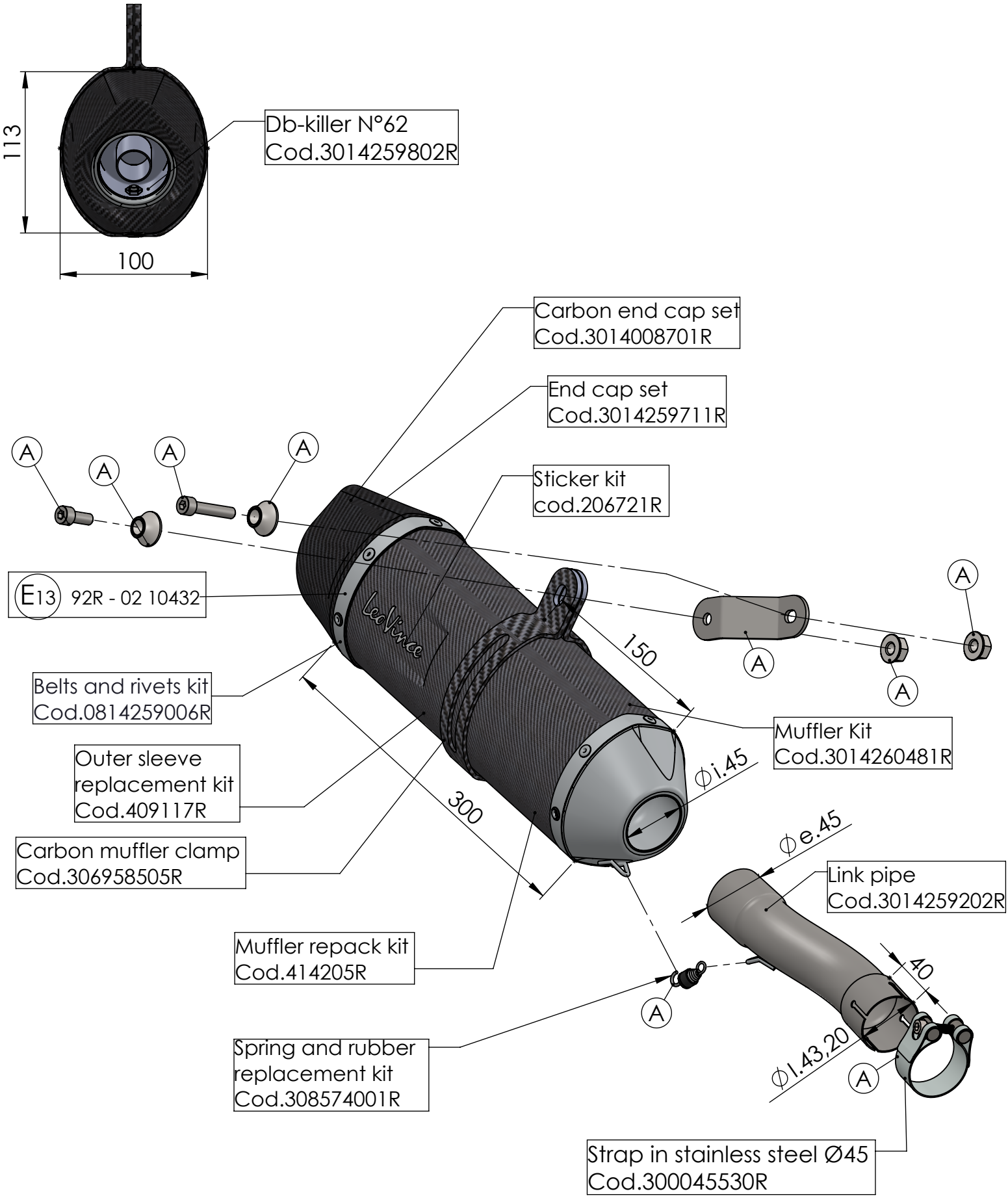

ART. 14260E - SPARE PARTS

KAWASAKI NINJA 400 / Z 400

Ⓐ FITTING KIT Cod. 3014259601R