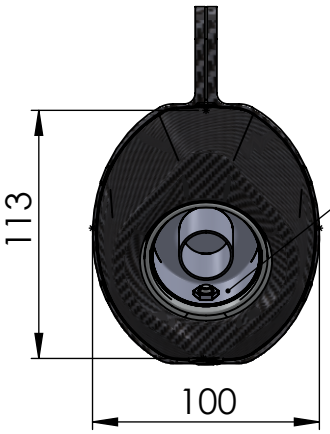

Db-killer N°62
Cod.3014259802R

Carbon end cap set
Cod.3014008701R

End cap set
Cod.3014259711R

E13 92R - 02 10432

Belts and rivets kit
Cod.0814259006R

Outer sleeve
replacement kit
Cod.083710014R

Carbon muffler clamp
Cod.306958505R

Muffler repack kit
Cod.414205R

Spring and rubber
replacement kit
Cod.308574001R

Muffler Kit
Cod.3014259481R

Link pipe
Cod.3014259202R

Strap in stainless steel Ø45
Cod.300045530R

150
300
ϕi.45
ϕe.45
40
ϕ1.43,20

ART. 14259E SPARE PARTS

KAWASAKI NINJA 400 / Z 400

Ⓐ FITTING KIT Cod. 3014259601R