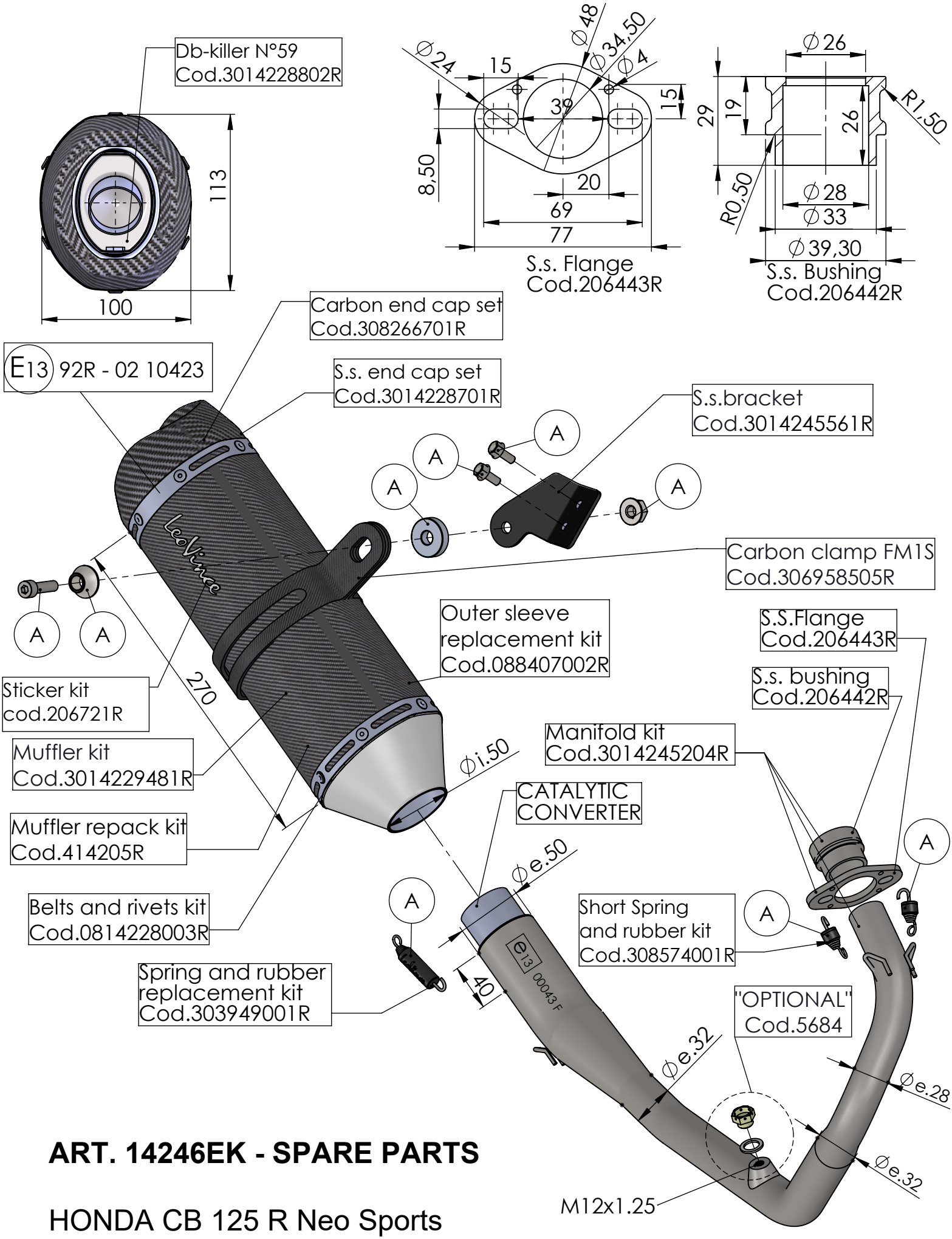

ART. 14246EK - SPARE PARTS

HONDA CB 125 R Neo Sports

Ⓐ FITTING KIT cod. 3014245601R