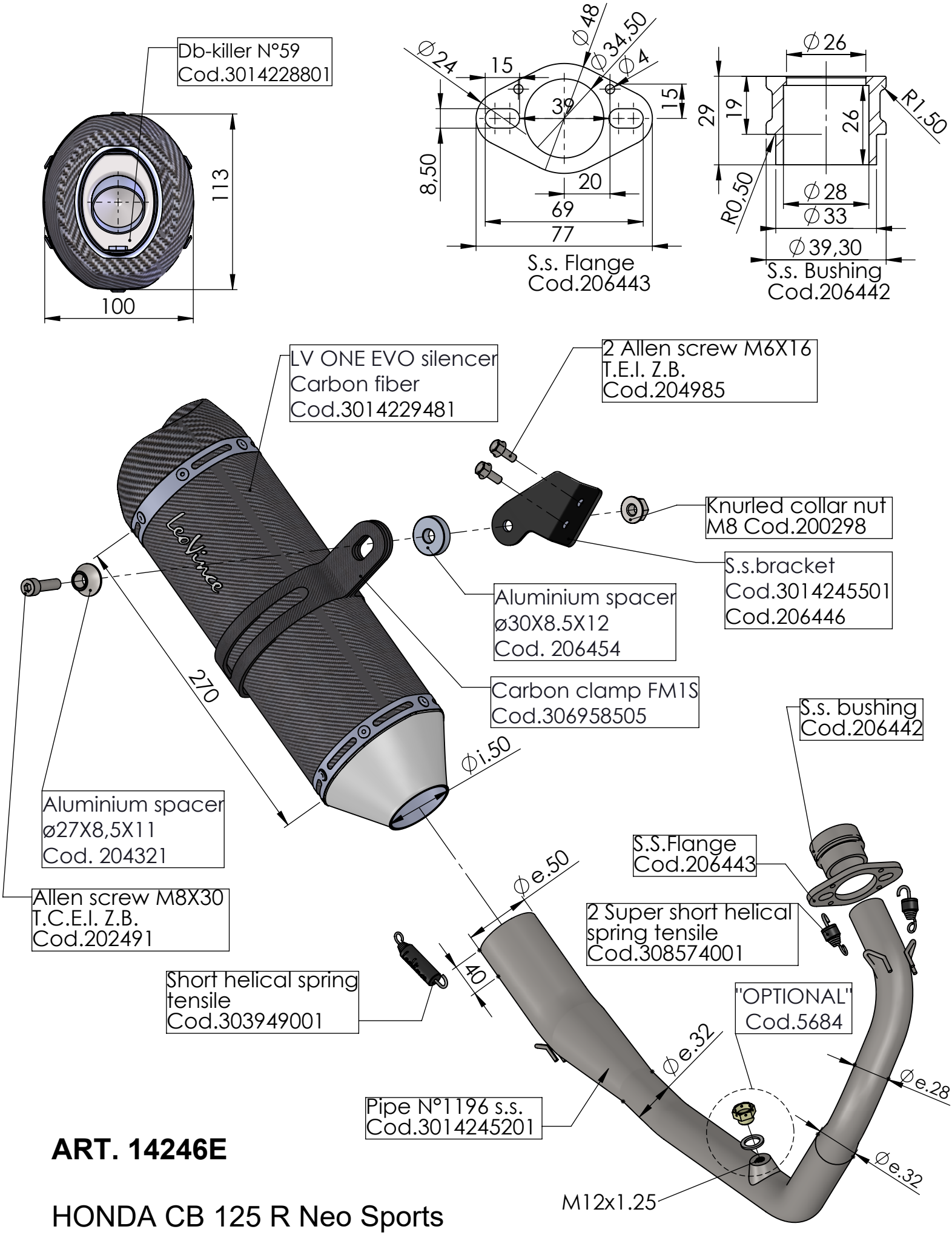

ART. 14246E

HONDA CB 125 R Neo Sports

FULL SYSTEM - LV ONE EVO - CARBON