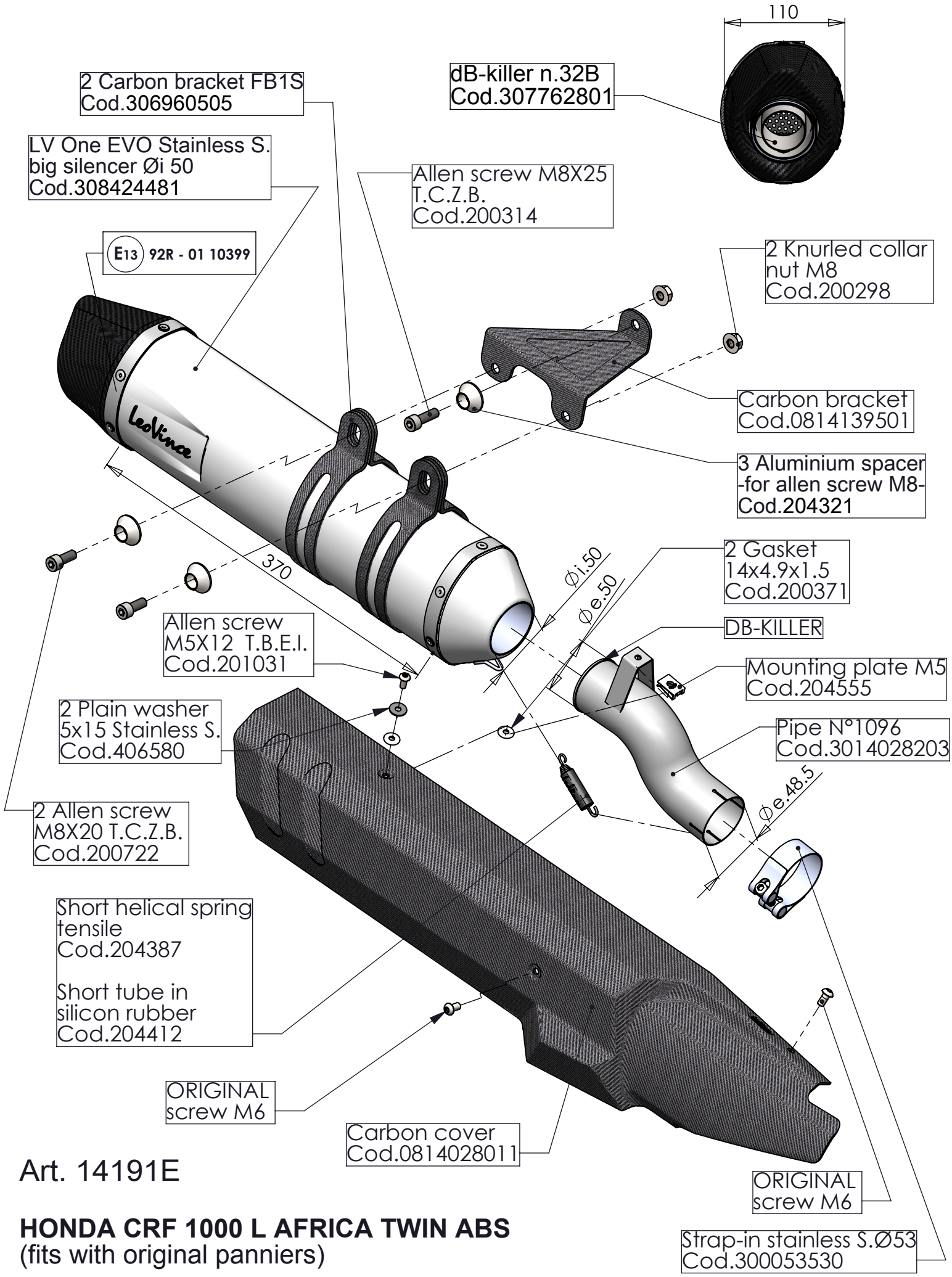

Art. 14191E

HONDA CRF 1000 L AFRICA TWIN ABS
(fits with original panniers)

SLIP-ON - LV ONE EVO STAINLESS STEEL - **APPROVED**