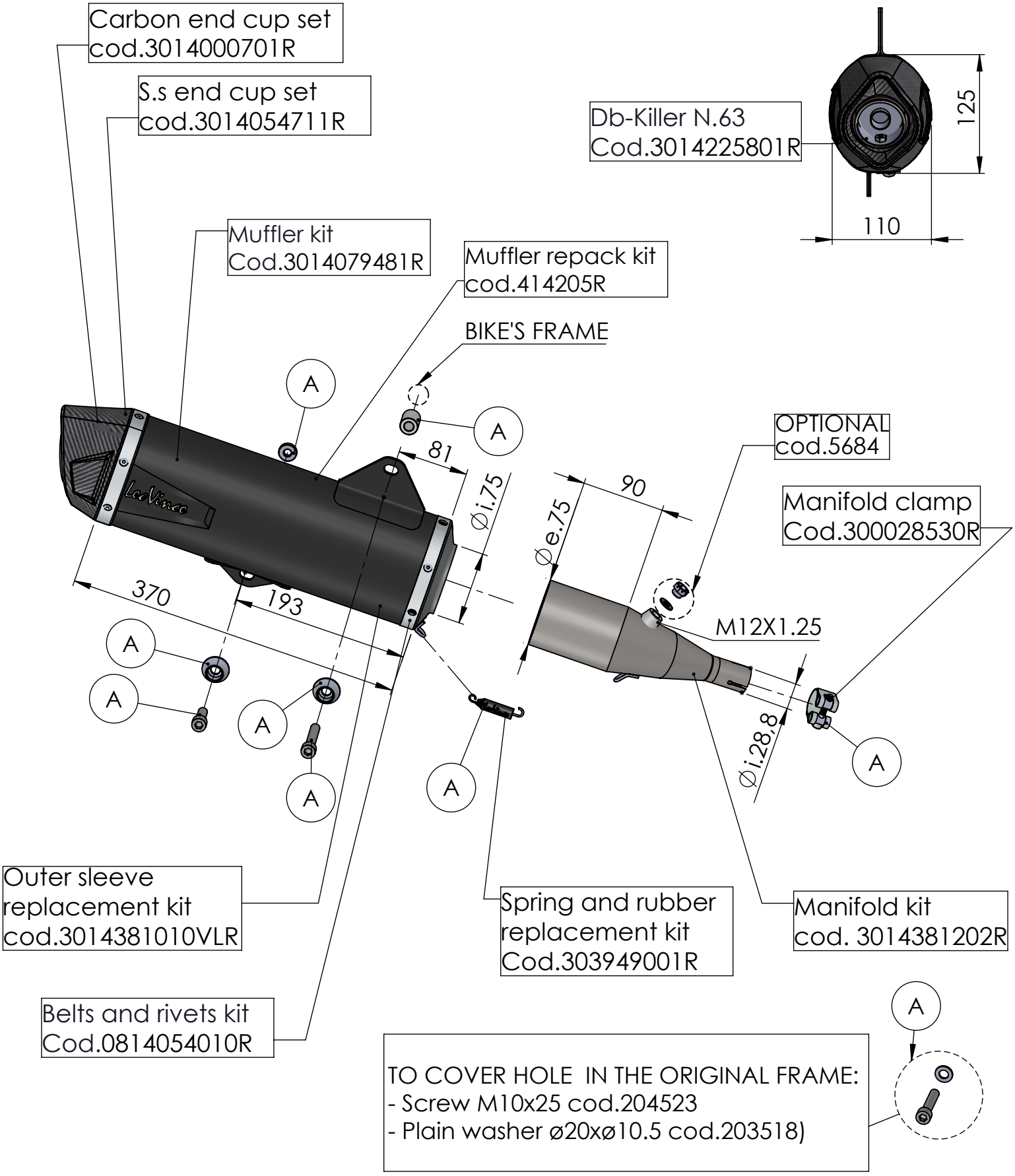

ART. 14079 - SPARE PARTS

HONDA ADV 350 / SH 350i

Ⓐ FITTING KIT cod. 3014381601R