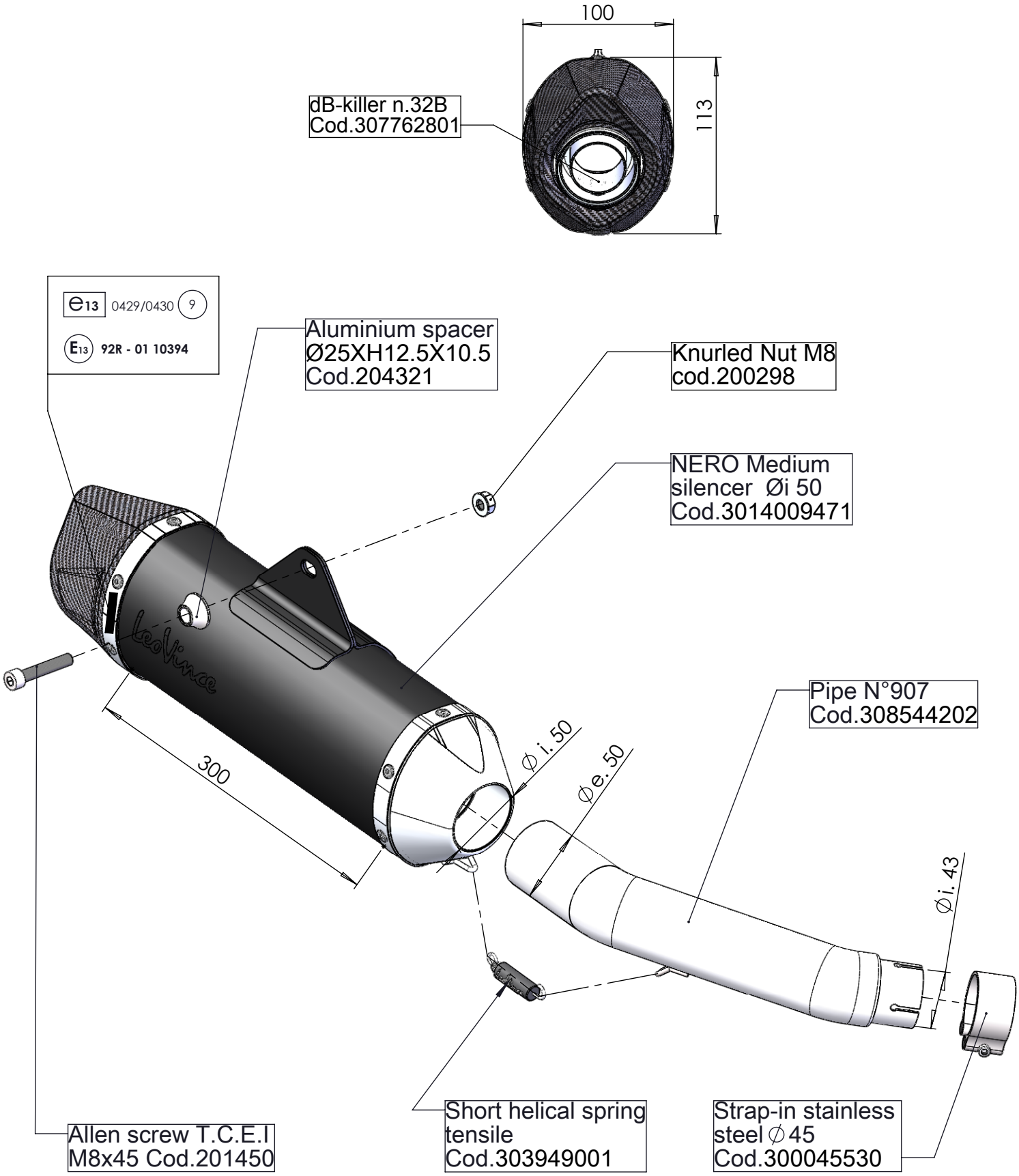

Art. 14040

SUZUKI GSX-S 750 ABS

Slip-on SBK "NERO" - APPROVED