Item number: **KFT.00.152.30302/B**	Revision: **00** · Date: **02 - 2025**

TRAX Toolbox

~ 0.5 h.	EASY DIFFICULT

ENGLISH ·Thank you for choosing this premium product from SW-MOTECH. Visit our online shop for more information (e.g. model assignments). Required documents (e.g. national type approval) are available there for you to download.

Please read and understand all the instructions, safety information and warnings in these mounting instructions before mounting and using the product in order to avoid injury and damage. Keep these mounting instructions for reference.

This product was developed for vehicles in factory condition. Compatibility with original accessories or accessories from other manufacturers cannot be guaranteed.

These mounting instructions have been prepared to the best of our current knowledge. No legal claims relating to accuracy can be made. Errors and omissions excepted. We reserve the right to make technical and design changes. The copyright is held by SW-MOTECH.

SAFETY WARNING SYMBOL

⚠ **This warning symbol is used in these mounting instructions to warn of deadly dangers, injuries or other hazards. The words DANGER, WARNING or CAUTION are used as part of this warning symbol to convey important safety messages and information relating to the installation and use of this product. These words, together with the safety warning symbol, mean:**

⚠ **DANGER:** Indicates a hazardous situation which, if not avoided, will result in death or serious injury!

⚠ **WARNING:** Indicates a hazardous situation which, if not avoided, may result in death or serious injury!

⚠ **CAUTION:** Indicates a hazardous situation which, if not avoided, may result in minor or moderate injury!

⚠ ***NOTE:*** Important information, but not relating to a risk of death or injury (property damage only)!

GENERAL INFORMATION

⚠ **WARNING: Assembly and/or maintenance of this product requires advanced technical skill, appropriate tools, and a good understanding of tool usage and torque specifications. For your own safety, SW-MOTECH recommends having the assembly and/or maintenance carried out by a qualified and certified motorcycle workshop.**

⚠ **WARNING: If you do choose to assemble this product yourself, carefully and fully read the mounting instructions before assembly and use, and follow all instructions to avoid serious injury or death. Also observe all relevant information in the vehicle manual when mounting or using the product. IF YOU DO NOT UNDERSTAND ANY PART OF THESE MOUNTING INSTRUCTIONS OR NEED AN EXPLANATION AS TO A SPECIFIC INSTRUCTION, DO NOT ATTEMPT TO INSTALL THIS PRODUCT WITHOUT CONSULTING SW-MOTECH FOR ASSISTANCE!**

PREPARATION: Read the mounting instructions carefully and make sure that all parts on the parts list are available.

⚠ **CAUTION: Ensure that your vehicle is standing securely. Switch off the engine and remove the ignition key. Allow the engine/exhaust to cool down if necessary. Disconnect the battery when working on the electrical system. Only use proper tools and always wear safety goggles and gloves during assembly and maintenance. Have a second person help you with assembly and maintenance.**

ASSEMBLY: All parts and connections removed from the vehicle must be reinstalled according to the vehicle manufacturer's specifications or replaced with parts and hardware supplied by SW-MOTECH.

⚠ **WARNING: Secure all threads with a medium-strength liquid threadlocker, unless otherwise specified.**

⚠ **DANGER: Tightening torques not defined by SW-MOTECH must be obtained from the vehicle manufacturer or a certified motorbike workshop.**

FUNCTIONAL CHECK: After mounting the product, ensure that no moving parts are obstructed and that the function of the vehicle is not impeded. Cables and hoses must not rub against each other and/or be hindered in any way.

⚠ **WARNING: Carry out a comprehensive functionality check before you start to drive. Check the tightening torque of all connections and the tight fit of the product after the first 50 km and then at regular intervals. Mounted accessories can change the handling and stability of the vehicle.**

SW-MOTECH GmbH & Co. KG
Ernteweg 7-10
35282 Rauschenberg
Germany

info@sw-motech.com
www.sw-motech.com

The content translation is automated.
© SW-MOTECH GmbH & Co. KG

Errors and omissions excepted
Subject to technical and design changes.

Take note of the symbols and what they mean in the ASSEMBLY section. If the term OEM appears in the ASSEMBLY section, the vehicle manufacturer's specifications must be observed and applied.

If you have any questions, please don't hesitate to contact our Customer Service team or our distributors. You can find our telephone number and a list of our distributors in our online shop:
www.sw-motech.com

Do not use thread lock: Indicates that no liquid thread lock should be used at this point.

Tighten/note the tightening torque information: Indicates the tightening torque of a part specified by SW-MOTECH or the vehicle manufacturer (OEM).

Tighten by hand: Indicates that the attachment must be carefully tightened by hand.

The content translation is automated.
© SW-MOTECH GmbH & Co. KG

Errors and omissions excepted
Subject to technical and design changes.

1

1	2	3	4	5	6
KFT.00.152.910.06.02	KFT.00.152.031/B	M6 x 16; ISO 7380 SC.ST.06.016.02.7380.109	M6 x 40; DIN 7991 SC.ST.06.040.01.7991.088	M6 x 30; ISO 7380 SC.ST.06.030.02.7380O.109	M6 x 20; ISO 7380 SC.ST.06.020.02.7380O.109
1/1	**3**/3	**3**/3	**3**/3	**3**/3	**3**/3

7	8	9
ø 6.4; DIN 125 US.ST.064.02.125	Ø 15 / ø 6,2 / h 15 DB.ST.0150.0062.0150.02	M6; DIN 6927 MU.ST.06.02.6927.08
3/3	**3**/3	**6**/6

6

10	11	12	13	14
KFT.00.152.510.02	KFT.00.152.A25.02	3,5 x 10 SC.PA.035.010.02.PT	KFT.00.152.A20.02	KFT.00.152.A21.02
1/1	**1**/1	**1**/1	**1**/1	**1**/1

The content translation is automated.
© SW-MOTECH GmbH & Co. KG

Errors and omissions excepted
Subject to technical and design changes.

1

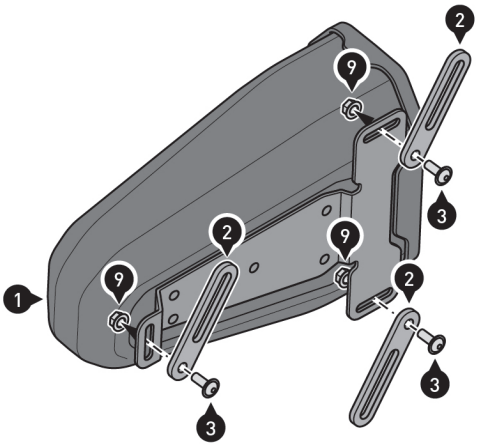

⚠ WARNING: Always wear eye and hand protection!
⚠ WARNING: Always use the proper tools!

⚠ ***NOTE:*** *The following mounting steps [2] to [5] are an example of how to mount the product. Since this is a universal product, install the product according to the specifics of your individual vehicle.*
Because this product involves custom assembly, it may be necessary to combine attachments from various steps.

⚠ ***NOTE:*** *Assembly steps [2] to [5] do not specify an assembly sequence but rather an example of how to mount the product. Install the parts listed in assembly step [1] as shown in the respective examples.*

Screw an individual number of mounting brackets (2) to one or more of the attachment points indicated.

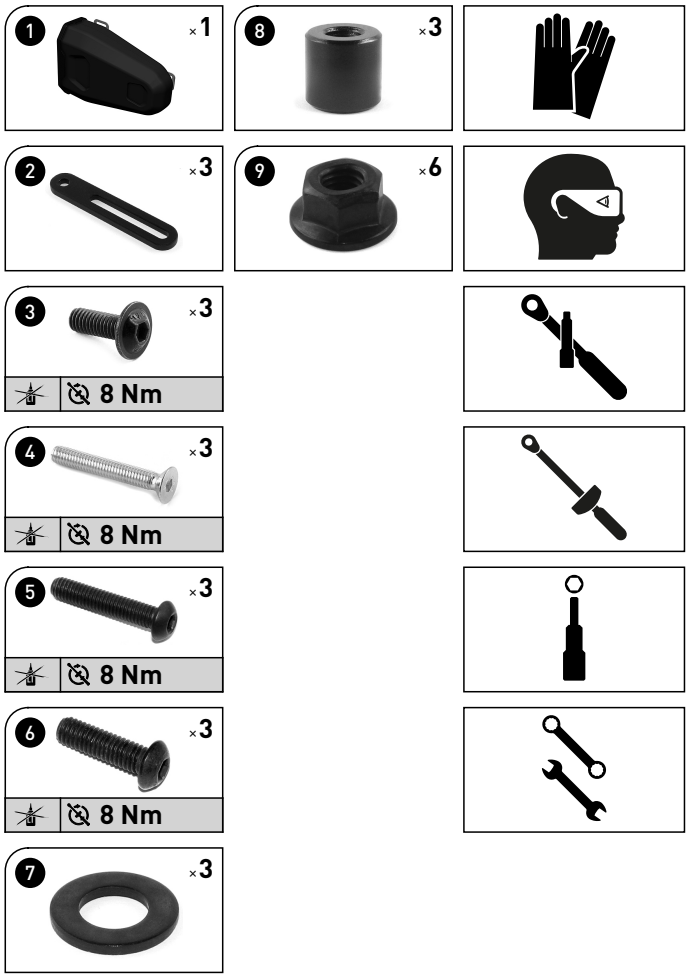

© SW-MOTECH GmbH & Co. KG

Errors and omissions excepted
Subject to technical and design changes.

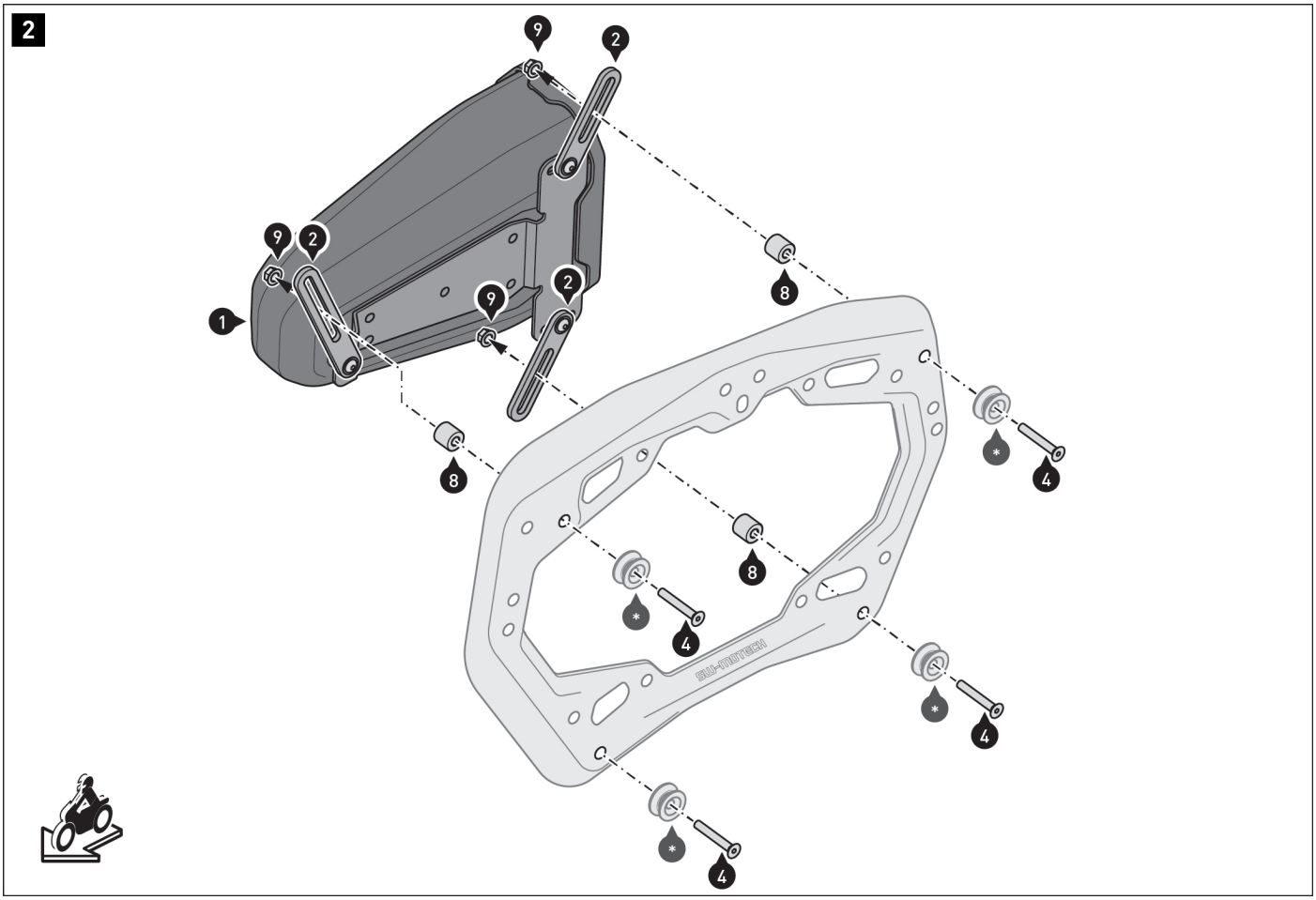

Mounting onto PRO side carrier - External attachment points with TRAX guide pins (*) (sold separately)

Screw the mounting brackets (2) to three of the marked mounting points on your PRO side carrier.
Now align the toolbox (1) according to your vehicle specifications.

⚠ DANGER: The toolbox (1) must not come into contact with hot, moving parts on the vehicle! Ensure that all parts are at least 5 cm away from hot parts as well from hot air issuing from the exhaust!

After alignment, tighten the screws (4) as specified in the mounting instructions.

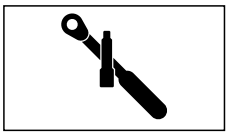

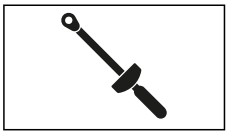

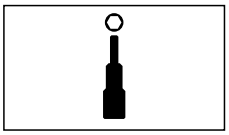

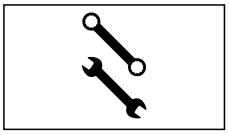

The content translation is automated.
© SW-MOTECH GmbH & Co. KG

Errors and omissions excepted
Subject to technical and design changes.

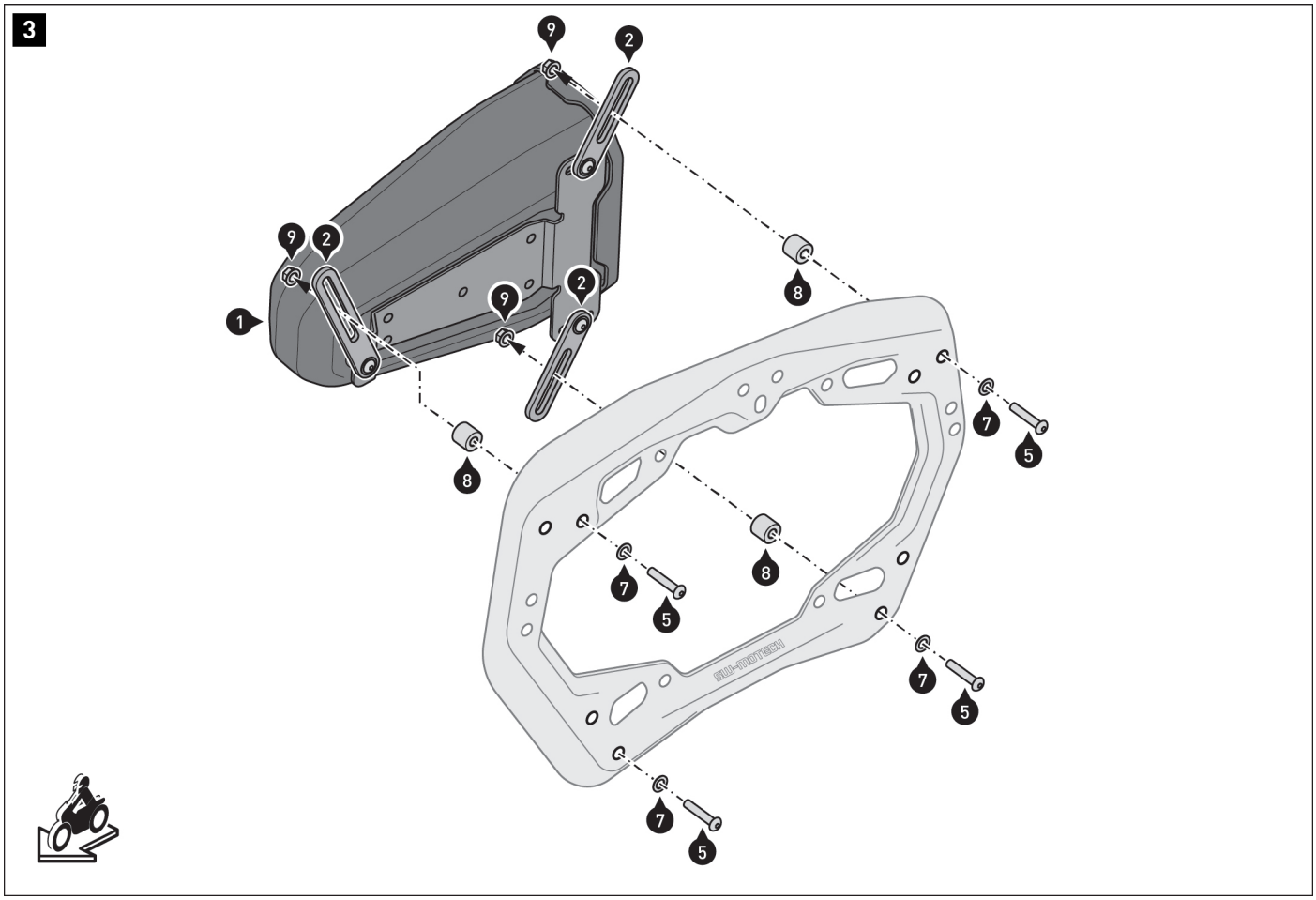

Mounting onto PRO side carrier - External attachment points without TRAX guide pins

Screw the mounting brackets (2) to three of the marked mounting points on your PRO side carrier.
Now align the toolbox (1) according to your vehicle specifications.

⚠ DANGER: The toolbox (1) must not come into contact with hot, moving parts on the vehicle! Ensure that all parts are at least 5 cm away from hot parts as well from hot air issuing from the exhaust!

After alignment, tighten the screws (5) as specified in the mounting instructions.

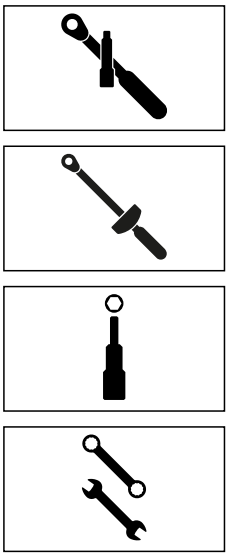

© SW-MOTECH GmbH & Co. KG

Errors and omissions excepted
Subject to technical and design changes.

4

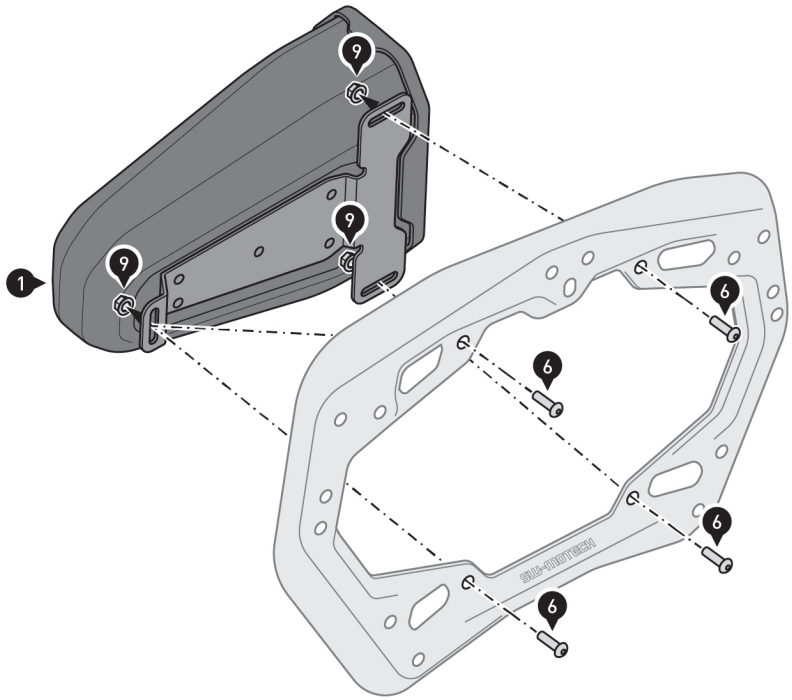

Mounting onto PRO side carrier - Inner attachment points

⚠ ***NOTE:*** *Please note that direct mounting is possible on only two of the inner mounting points. On the third outer mounting point, use a combination of mounting parts as described in step [3].*

Screw the toolbox (1) to three of the marked attachment points on your PRO side carrier.
Now align the toolbox (1) according to your vehicle specifications.

⚠ DANGER: The toolbox (1) must not come into contact with hot, moving parts on the vehicle! Ensure that all parts are at least 5 cm away from hot parts as well from hot air issuing from the exhaust!

After alignment, tighten the screws (6) as specified in the mounting instructions.

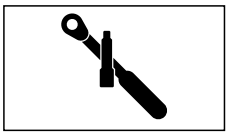

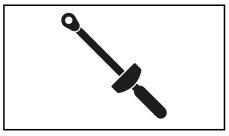

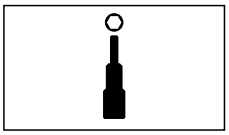

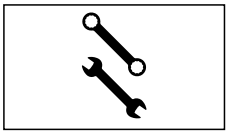

The content translation is automated.
© SW-MOTECH GmbH & Co. KG

Errors and omissions excepted
Subject to technical and design changes.

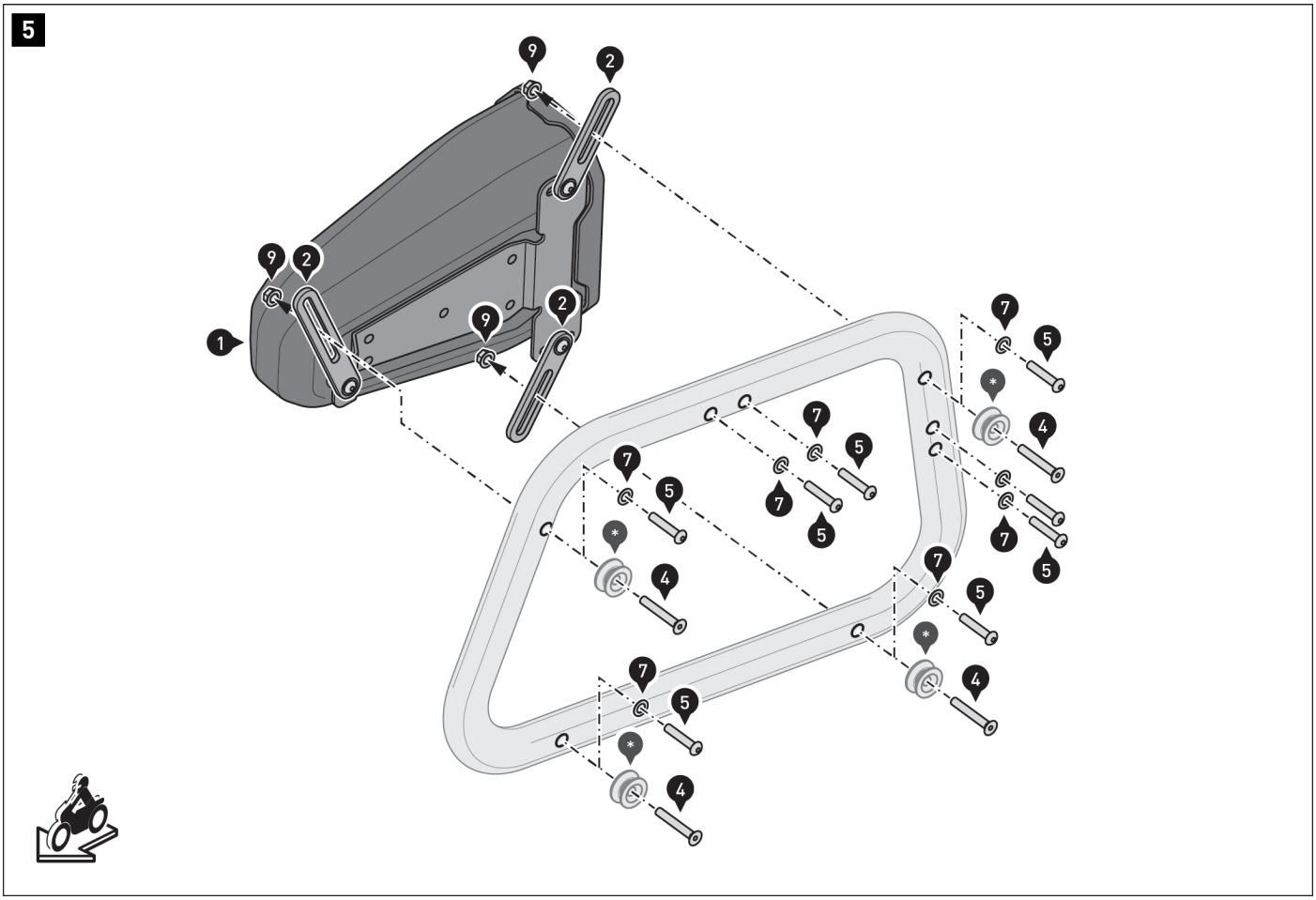

Mounting onto EVO side carrier - With and without TRAX guide pins (*) (sold separately)

Screw the mounting brackets (2) to three of the marked attachment points on your EVO side carrier.
Now align the toolbox (1) according to your vehicle specifications.

⚠ DANGER: The toolbox (1) must not come into contact with hot, moving parts on the vehicle! Ensure that all parts are at least 5 cm away from hot parts as well from hot air issuing from the exhaust!

After alignment, tighten the screws (4) or (5) as specified in the mounting instructions.

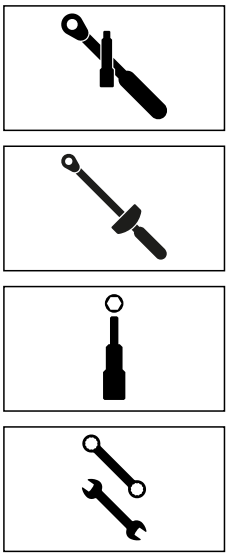

© SW-MOTECH GmbH & Co. KG

Errors and omissions excepted
Subject to technical and design changes.

6

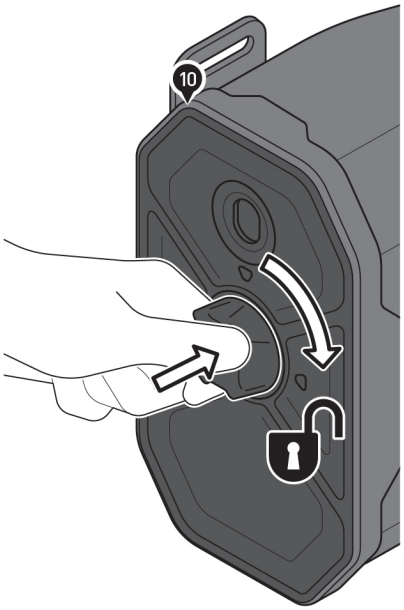

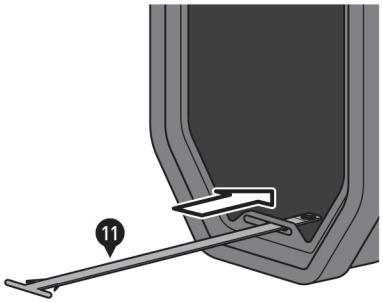

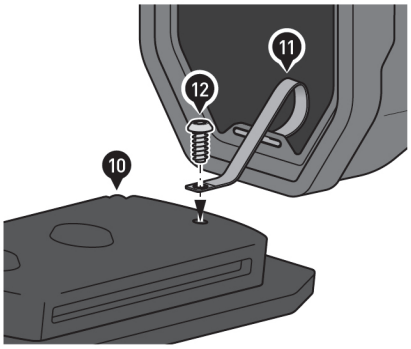

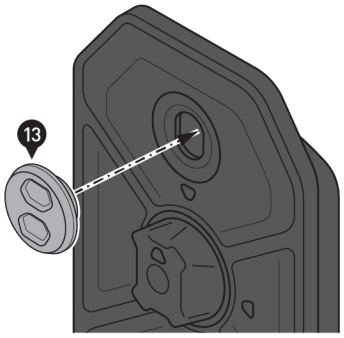

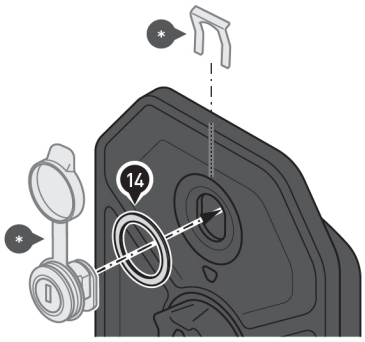

Opening/closing the lid

Press the safety button, and turn it clockwise. The lid (10) can now be removed.
⚠ ***NOTE:*** *Be sure to always leave the lock button in the locked position while riding.*

Pass the safety strap (11) through the lower eyelet of the toolbox frame. Then screw the safety strap (11) to the cover (10) using the screw (12). Carefully hand-tighten the screw (12). Over-tightening may damage the cover (10).

Close the lock opening with the sealing plug (13).
To protect the contents of the toolbox (1) against theft, the separately available SW-MOTECH lock set (*) can be mounted with the sealing ring (14).

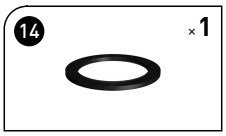

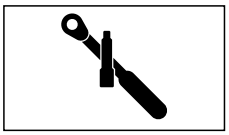

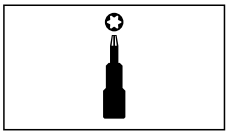

© SW-MOTECH GmbH & Co. KG

Errors and omissions excepted
Subject to technical and design changes.

PRODUCT-SPECIFIC NOTES

⚠ ***NOTE:*** *Observe the country-specific regulations for the registration/operation of your vehicle or applicable TÜV regulations. Have parts that require registration entered in the vehicle documents by your test center after installation.*

⚠ DANGER: Since this is a universal product, please make sure that the product can be attached and used properly and seamlessly on your vehicle type BEFORE using it for the first time! After attaching, check that all vehicle parts can move freely and function properly! Lamps such as taillights and turn light indicators must not be impeded in their function! Cables, wires and hoses should not rub and/or squeeze against anything!

⚠ DANGER: Carry out a comprehensive functional check before starting your journey!

⚠ DANGER: Check that the product sits firmly in place before starting your journey and at every rest stop (every 200 km)!

⚠ DANGER: The driving/braking behavior of the motorcycle changes noticeably after the attachment of this product!

⚠ DANGER: Lean angle and ground clearance may be restricted by this product!

⚠ DANGER: Please note the maximum load of your SW-MOTECH carrier! The maximum load of the vehicle specified by the vehicle manufacturer applies!

see SW-MOTECH carrier	≤ 130km/h (≤ 80mph)

© SW-MOTECH GmbH & Co. KG

Errors and omissions excepted
Subject to technical and design changes.