Item number: **SBL.29.981.10001/B**	Revision: **00** · Date: **04 - 2026**

Crash bar

~ 1.5 h.	EASY DIFFICULT

ENGLISH ·Thank you for choosing this premium product from SW-MOTECH. Visit our online shop for more information (e.g. model assignments). Required documents (e.g. national type approval) are available there for you to download.

Please read and understand all the instructions, safety information and warnings in these mounting instructions before mounting and using the product in order to avoid injury and damage. Keep these mounting instructions for reference.

This product was developed for vehicles in factory condition. Compatibility with original accessories or accessories from other manufacturers cannot be guaranteed.

These mounting instructions have been prepared to the best of our current knowledge. No legal claims relating to accuracy can be made. Errors and omissions excepted. We reserve the right to make technical and design changes. The copyright is held by SW-MOTECH.

SAFETY WARNING SYMBOL

⚠ **This warning symbol is used in these mounting instructions to warn of deadly dangers, injuries or other hazards. The words DANGER, WARNING or CAUTION are used as part of this warning symbol to convey important safety messages and information relating to the installation and use of this product. These words, together with the safety warning symbol, mean:**

⚠ **DANGER:** Indicates a hazardous situation which, if not avoided, will result in death or serious injury!

⚠ **WARNING:** Indicates a hazardous situation which, if not avoided, may result in death or serious injury!

⚠ **CAUTION:** Indicates a hazardous situation which, if not avoided, may result in minor or moderate injury!

⚠ ***NOTE:*** Important information, but not relating to a risk of death or injury (property damage only)!

GENERAL INFORMATION

⚠ **WARNING: Assembly and/or maintenance of this product requires advanced technical skill, appropriate tools, and a good understanding of tool usage and torque specifications. For your own safety, SW-MOTECH recommends having the assembly and/or maintenance carried out by a qualified and certified motorcycle workshop.**

⚠ **WARNING: If you do choose to assemble this product yourself, carefully and fully read the mounting instructions before assembly and use, and follow all instructions to avoid serious injury or death. Also observe all relevant information in the vehicle manual when mounting or using the product. IF YOU DO NOT UNDERSTAND ANY PART OF THESE MOUNTING INSTRUCTIONS OR NEED AN EXPLANATION AS TO A SPECIFIC INSTRUCTION, DO NOT ATTEMPT TO INSTALL THIS PRODUCT WITHOUT CONSULTING SW-MOTECH FOR ASSISTANCE!**

PREPARATION: Read the mounting instructions carefully and make sure that all parts on the parts list are available.

⚠ **CAUTION: Ensure that your vehicle is standing securely. Switch off the engine and remove the ignition key. Allow the engine/exhaust to cool down if necessary. Disconnect the battery when working on the electrical system. Only use proper tools and always wear safety goggles and gloves during assembly and maintenance. Have a second person help you with assembly and maintenance.**

ASSEMBLY: All parts and connections removed from the vehicle must be reinstalled according to the vehicle manufacturer's specifications or replaced with parts and hardware supplied by SW-MOTECH.

⚠ **WARNING: Secure all threads with a medium-strength liquid threadlocker, unless otherwise specified.**

⚠ **DANGER: Tightening torques not defined by SW-MOTECH must be obtained from the vehicle manufacturer or a certified motorbike workshop.**

FUNCTIONAL CHECK: After mounting the product, ensure that no moving parts are obstructed and that the function of the vehicle is not impeded. Cables and hoses must not rub against each other and/or be hindered in any way.

⚠ **WARNING: Carry out a comprehensive functionality check before you start to drive. Check the tightening torque of all connections and the tight fit of the product after the first 50 km and then at regular intervals. Mounted accessories can change the handling and stability of the vehicle.**

SW-MOTECH GmbH & Co. KG
Ernteweg 7-10
35282 Rauschenberg
Germany

info@sw-motech.com
www.sw-motech.com

The content translation is automated.
© SW-MOTECH GmbH & Co. KG

Errors and omissions excepted
Subject to technical and design changes.

Take note of the symbols and what they mean in the ASSEMBLY section. If the term OEM appears in the ASSEMBLY section, the vehicle manufacturer's specifications must be observed and applied.

If you have any questions, please don't hesitate to contact our Customer Service team or our distributors. You can find our telephone number and a list of our distributors in our online shop:
www.sw-motech.com

Use thread locker: Indicates that a thread must be coated with liquid thread locker. H (HIGH): high strength; M (MEDIUM): medium strength; L (LOW): low strength.

Tighten/note the tightening torque information: Indicates the tightening torque of a part specified by SW-MOTECH or the vehicle manufacturer (OEM).

The content translation is automated.
© SW-MOTECH GmbH & Co. KG

Errors and omissions excepted
Subject to technical and design changes.

3

1	2	3	4	5	6
SBL.29.981.901.01.11	SBL.29.981.902.01.11	SBL.54.773.002/TB	SBL.00.051.011.11	SBL.00.051.010.11	SST.0880.0200.0010.02
1/1	**1**/1	**2**/2	**2**/2	**2**/2	**4**/4

4

7
M6 x 25; DIN 912 SC.ST.06.025.02.912.088
2/2

5

8	9	10	11	12	13
M8 x 16; DIN 6912 SC.ST.08.016.01.6912.088	ø 8,4; DIN 9021 US.ST.084.02.9021	M6 x 16; DIN 912 SC.ST.06.016.01.912.088	ø 6.4; DIN 125 US.ST.064.02.125	M8 x 80; DIN 6912 SC.ST.08.080.01.6912.088	M8 x 50; DIN 6912 SC.ST.08.050.01.6912.088
2/2	**4**/4	**4**/4	**4**/6	**2**/2	**2**/2

14
Ø 20 / ø 8,4 / h 15 DB.ST.0200.0084.0150.48
2/2

6

15	16	17
M6 x 30; DIN 6912 SC.ST.06.030.01.6912.088	ø 6.4; DIN 125 US.ST.064.02.125	Ø 15 / ø 6,4 / h 15 DB.ST.0150.0064.0150.48
2/2	**2**/6	**2**/2

The content translation is automated.
© SW-MOTECH GmbH & Co. KG

Errors and omissions excepted
Subject to technical and design changes.

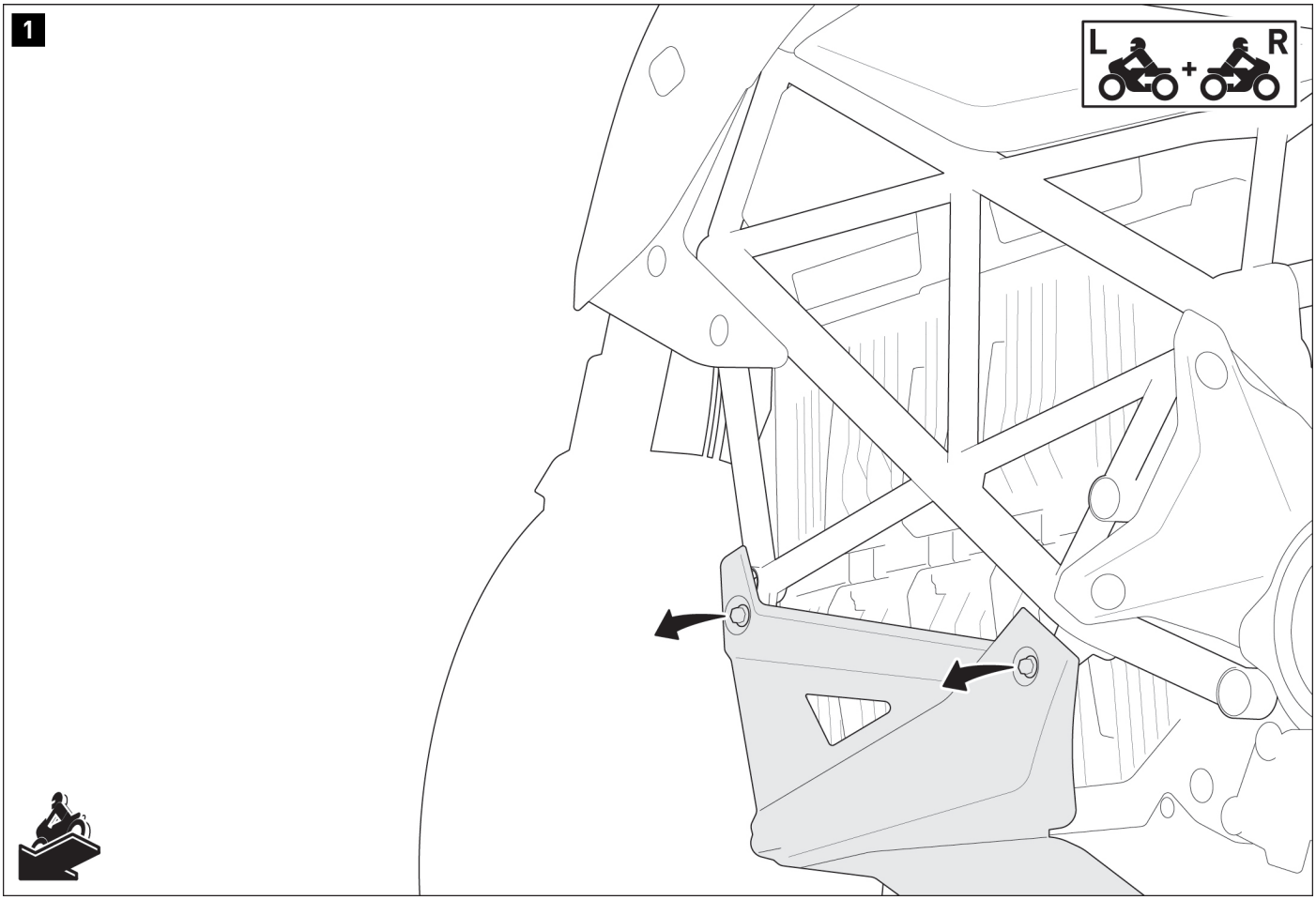

⚠ WARNING: Always wear eye and hand protection!
⚠ WARNING: Always use suitable tools!

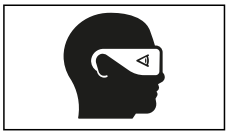

Remove the indicated screws on **both sides** as well as the battery cover from the vehicle.

© SW-MOTECH GmbH & Co. KG

Errors and omissions excepted
Subject to technical and design changes.

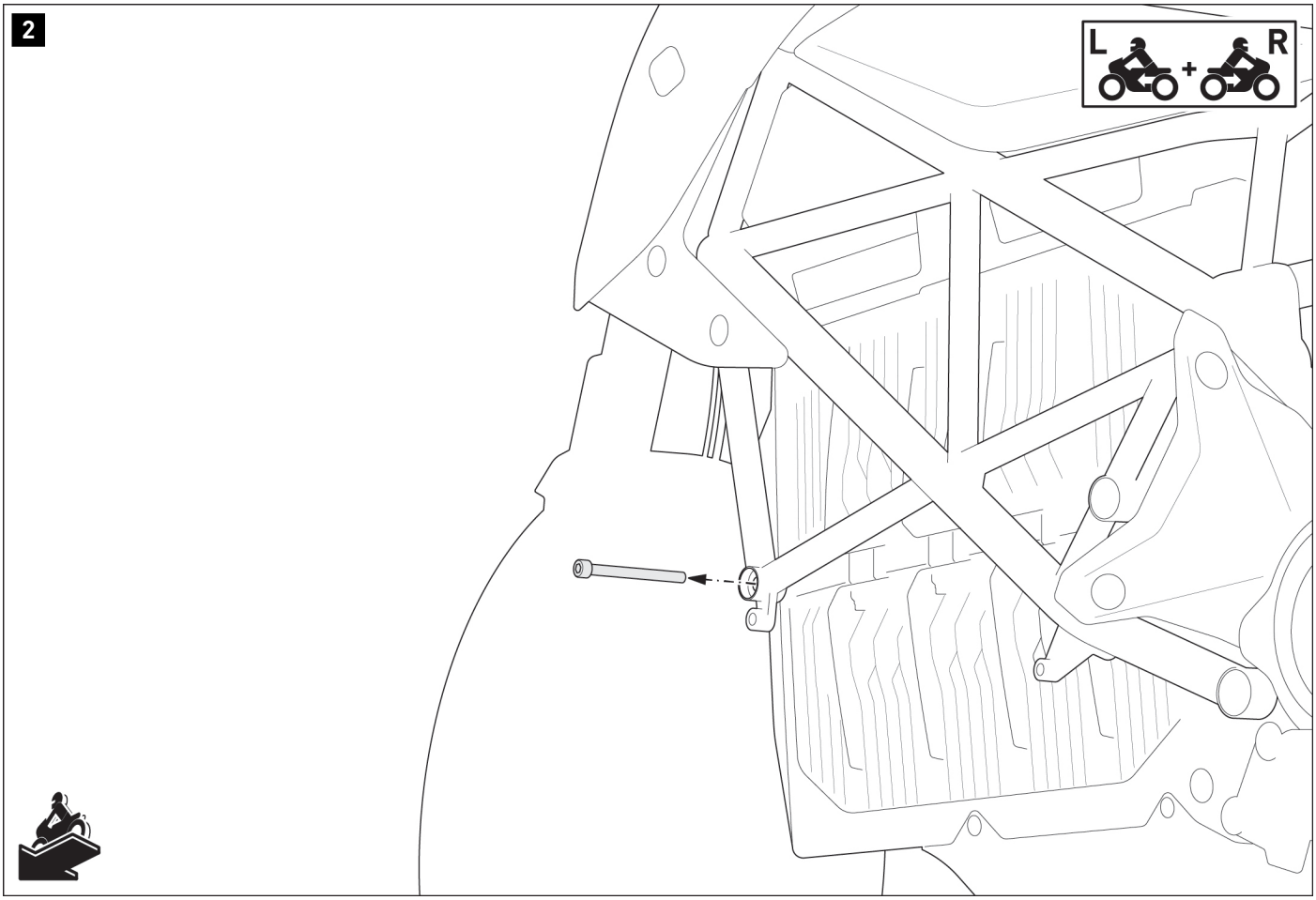

Remove the indicated screws from **both sides** of the vehicle.

The content translation is automated.
© SW-MOTECH GmbH & Co. KG

Errors and omissions excepted
Subject to technical and design changes.

3

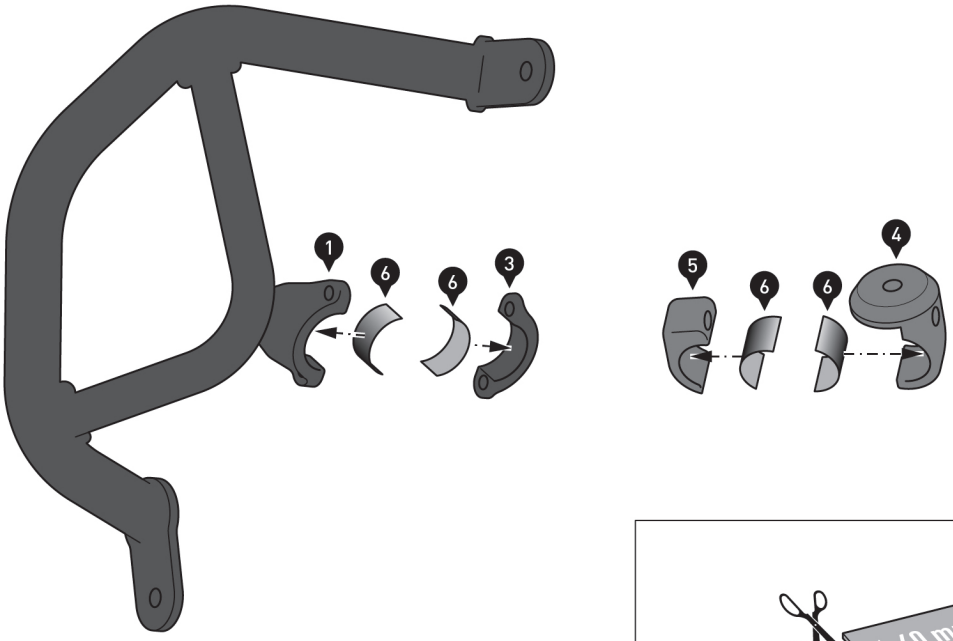

Cut the rubber strip (6) into two 40 mm pieces (the rest is no longer required).

Clean the inside of the terminals to remove any grease or dirt residue.
Glue the rubber strips (6) to the contact surface of clamps (3), (4) and (5) as well as to the contact surface of the welded clamps included with the crash bars (1/2).

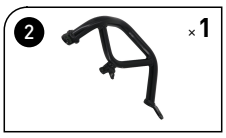

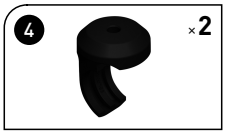

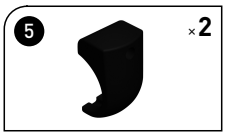

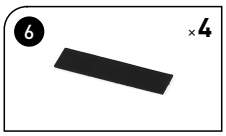

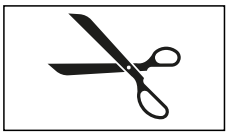

© SW-MOTECH GmbH & Co. KG

Errors and omissions excepted
Subject to technical and design changes.

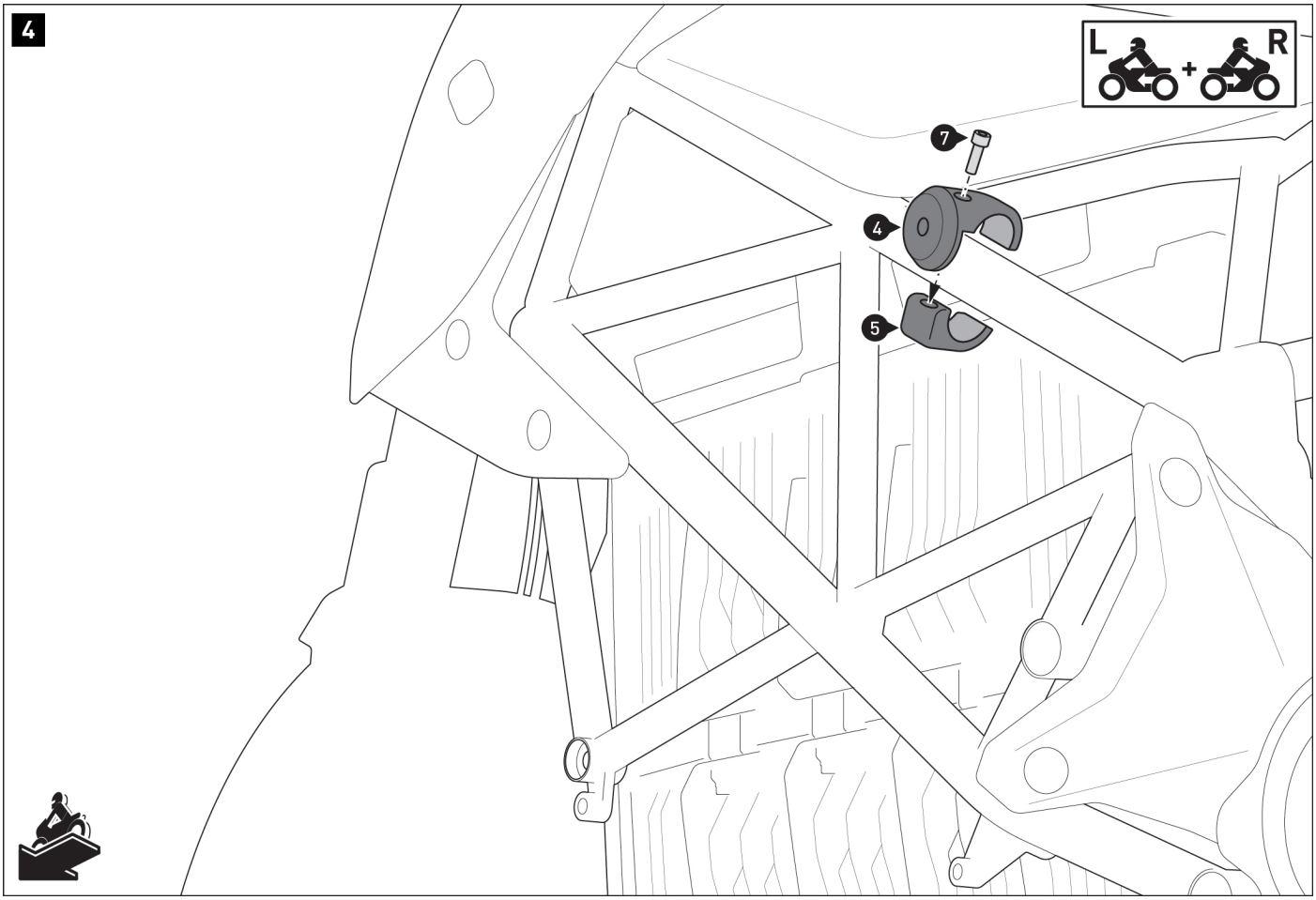

Screw clamps (4) and (5) to **both sides** of the vehicle frame.
⚠ WARNING: Use liquid threadlocker!
Do not tighten the screws (7) yet.

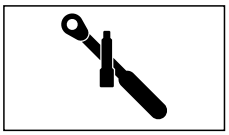

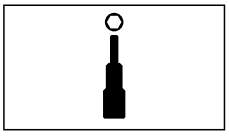

The content translation is automated.
© SW-MOTECH GmbH & Co. KG

Errors and omissions excepted
Subject to technical and design changes.

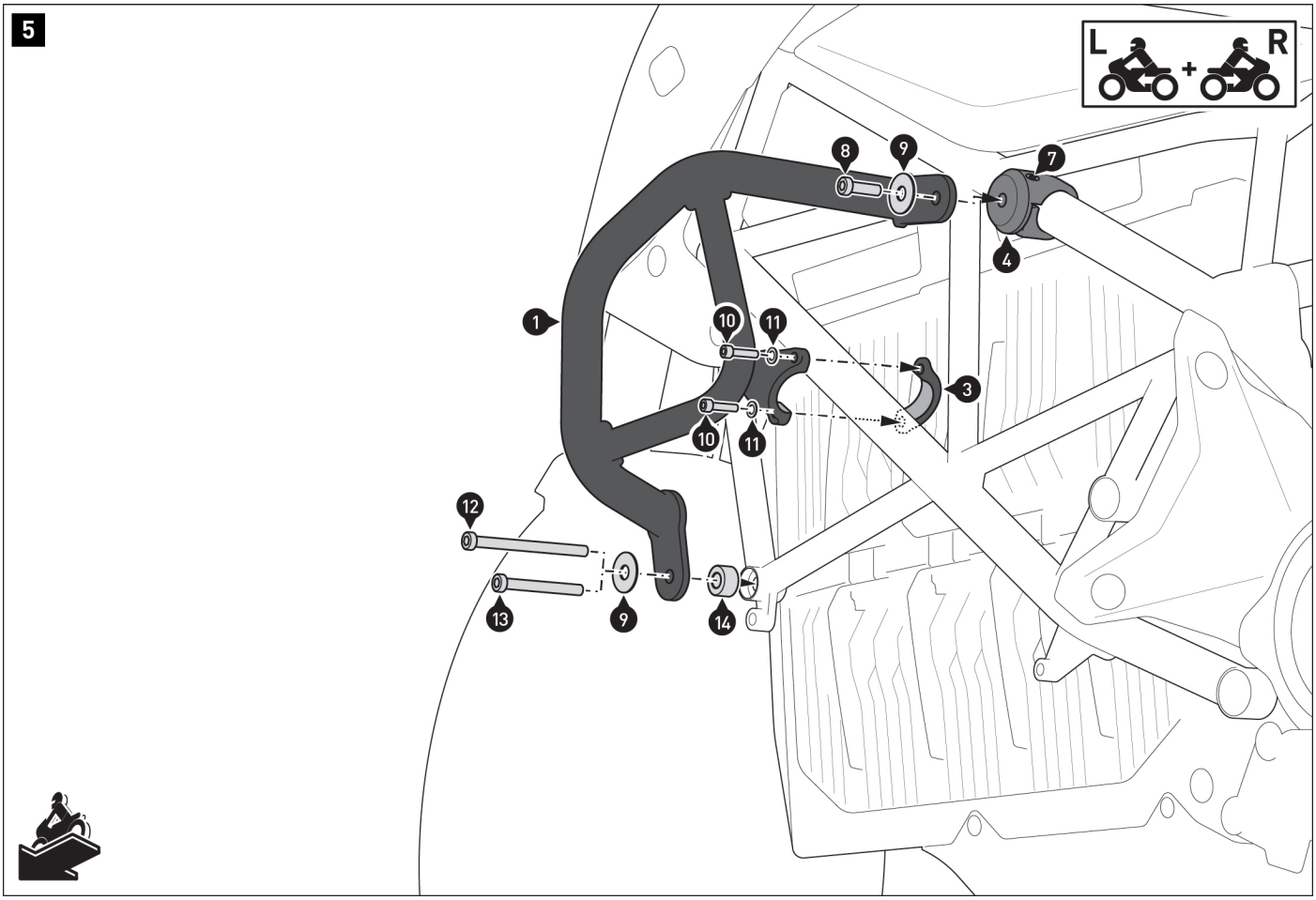

⚠ ***NOTE:*** *Use screws (12) on vehicles with a* ***battery capacity of 14.4 kWh****. Use screws (13) on vehicles with a* ***battery capacity of 15.6 kWh****.*

Screw the crash bars (1/2) onto **both sides** of the vehicle.
⚠ WARNING: Use liquid threadlocker!
Once all parts are in place, tighten screws (8), (10), (12/13) and (7) as specified in the mounting instructions.

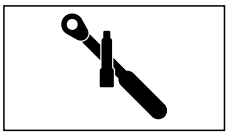

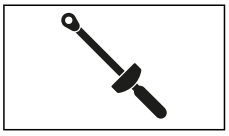

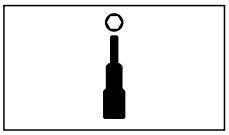

© SW-MOTECH GmbH & Co. KG

Errors and omissions excepted
Subject to technical and design changes.

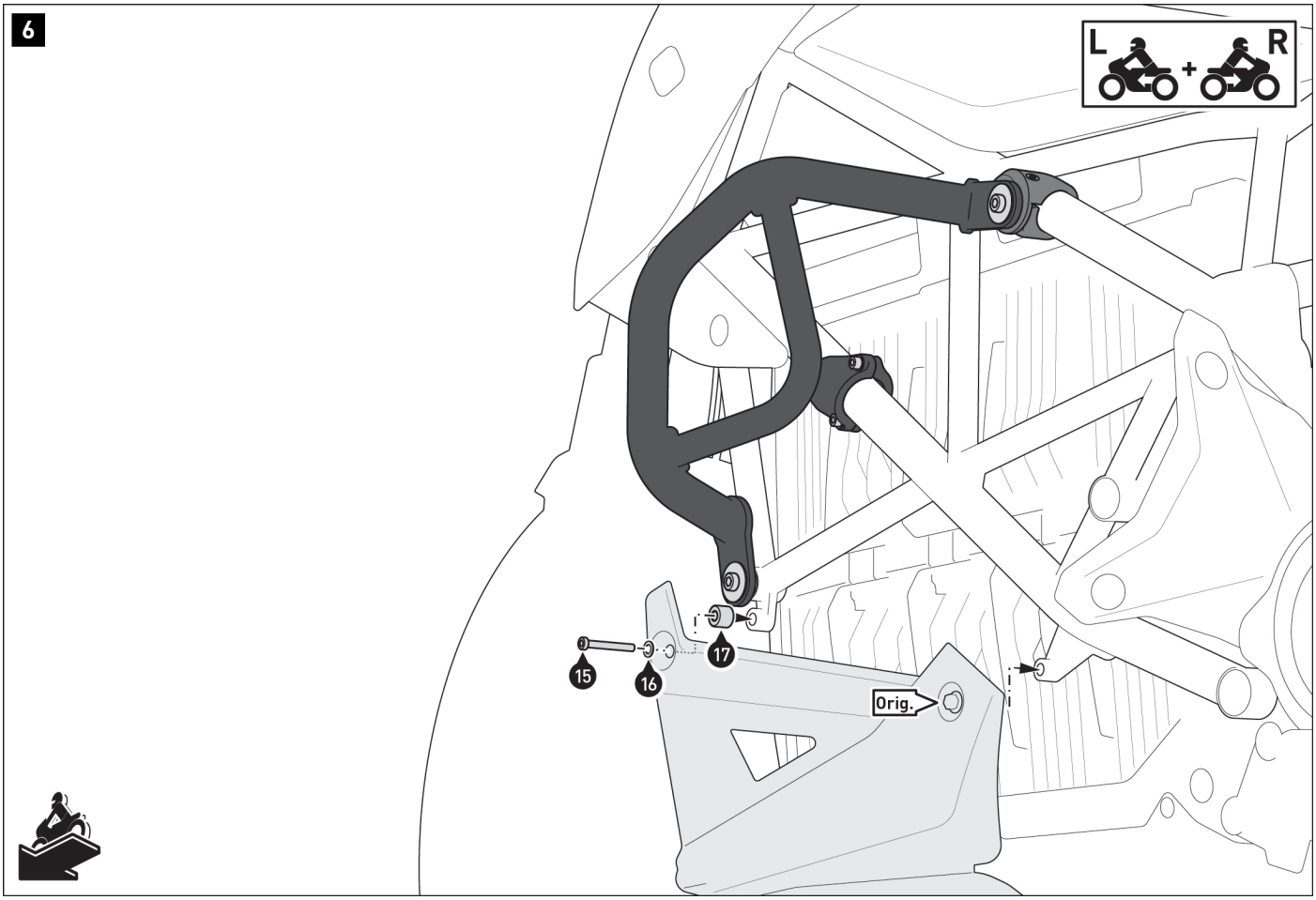

Screw the battery cover to the vehicle on **both sides**. Use the original screws (not shown) for the rear attachment points.
⚠ WARNING: Use liquid threadlocker!
Tighten the screws (15) as specified in the mounting instructions.
Tighten the original screws (Orig.) according to the vehicle manufacturer's specifications.

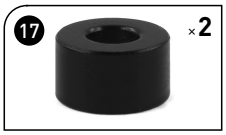

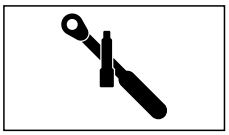

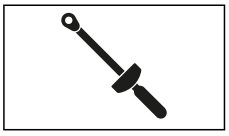

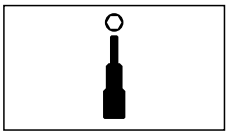

The content translation is automated.
© SW-MOTECH GmbH & Co. KG

Errors and omissions excepted
Subject to technical and design changes.

PRODUCT-SPECIFIC NOTES

⚠ WARNING: This product may inhibit cornering and ground clearance in cases of extreme inclination!
⚠ ***NOTE:*** *Observe the country-specific regulations for the registration/operation of your vehicle and any applicable TÜV regulations. Have any parts requiring registration entered into your vehicle documents by your inspection centre after they have been installed.*

© SW-MOTECH GmbH & Co. KG

Errors and omissions excepted
Subject to technical and design changes.