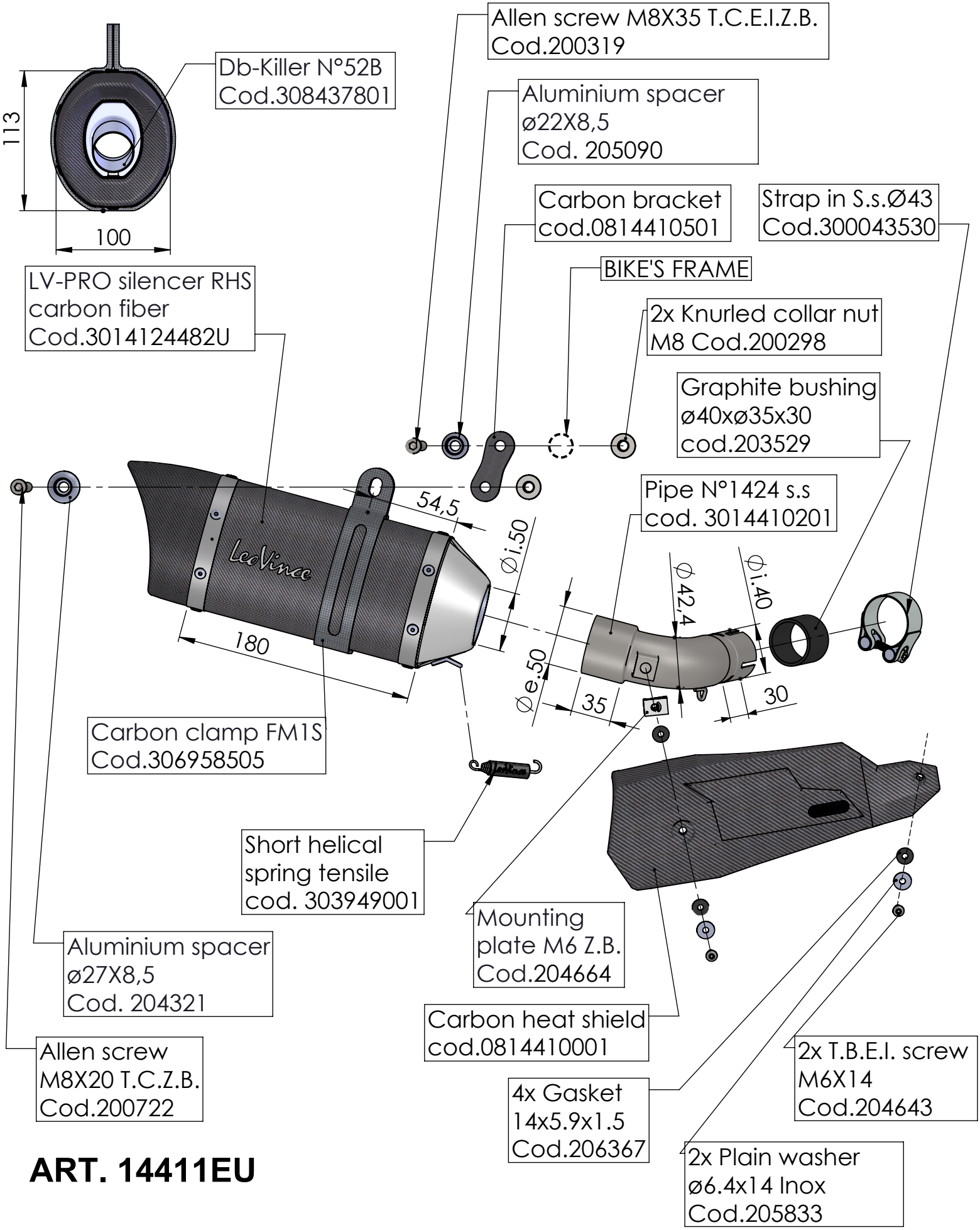

ART. 14411EU

MOTO MORINI X-CAPE 650
(also fits 35kW version) (Fits with original panniers)

SLIP-ON - LV-PRO - CARBON