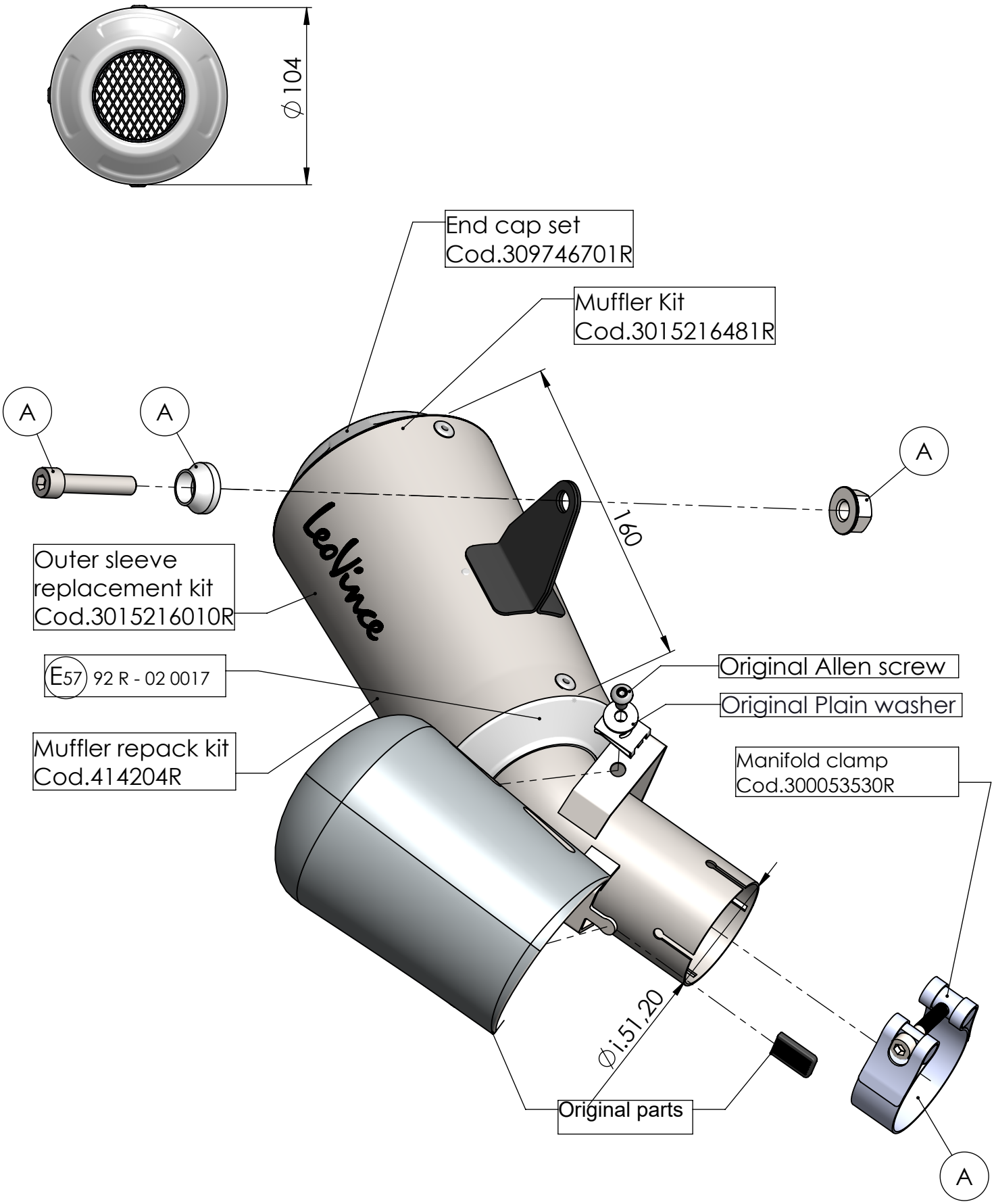

ART. 15216 - SPARE PARTS

KAWASAKI Z 900 RS / CAFE

Ⓐ FITTING KIT Cod.3015216601R