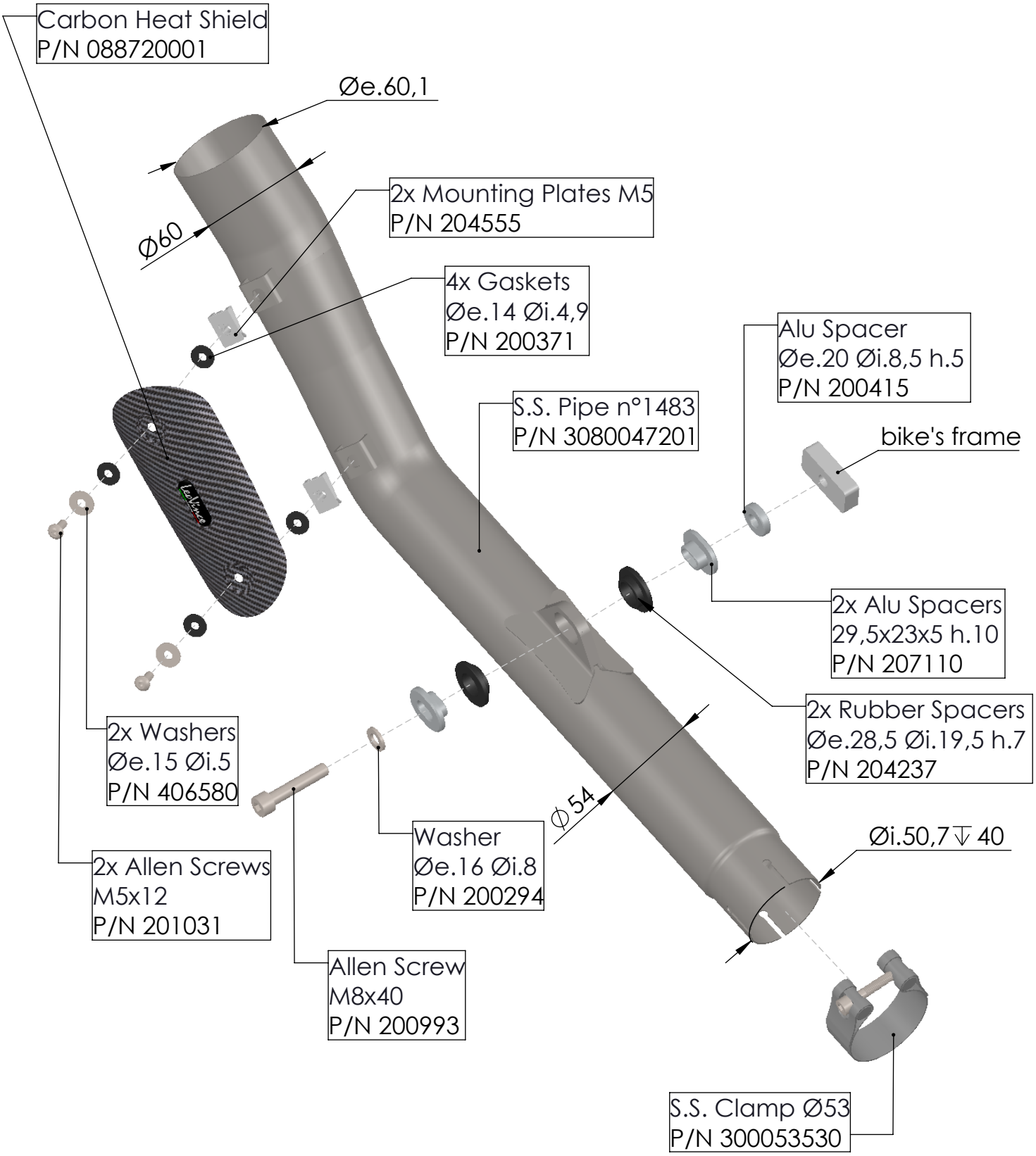

ART. 80047

KOVE 450 RALLY LOW / HIGH

SLIP ON - LV ONE EVO - CAT ELIMINATOR