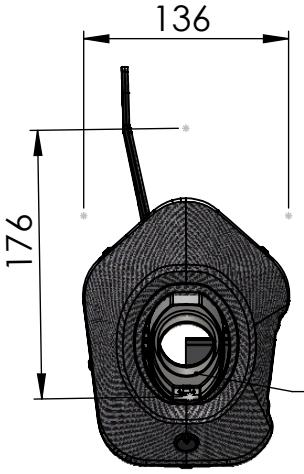

Db-Killer N.77
Cod.3015308801R

Carbon end cup set
cod.3015308701R

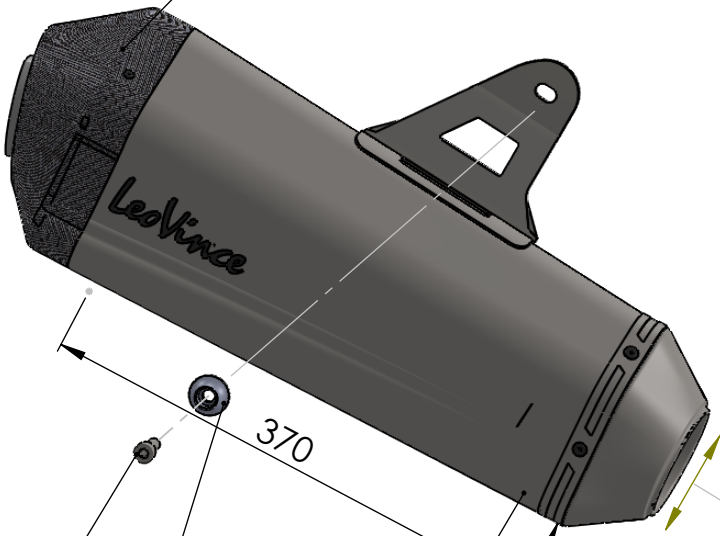

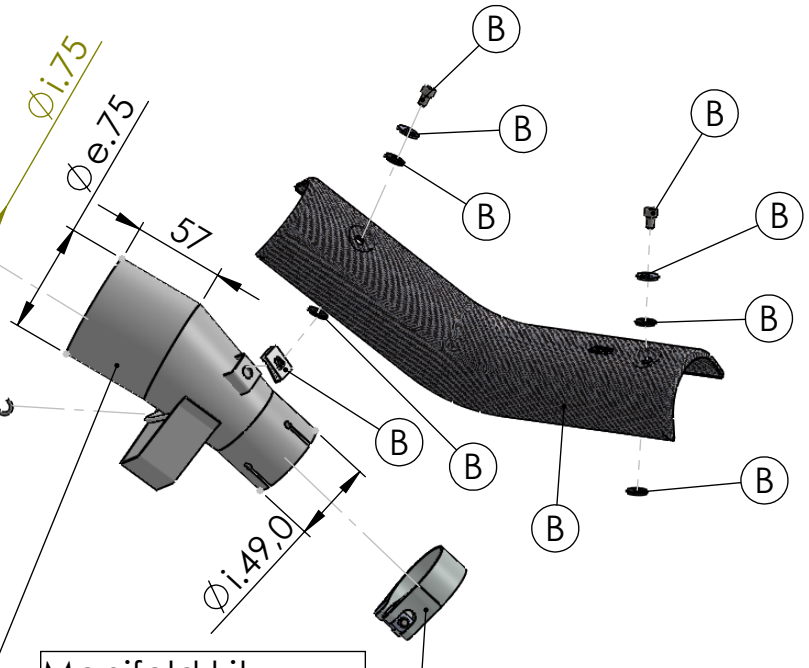

A
A
A
A

Muffler kit
Cod.3015312481R

E57 92R-02 0111

Manifold kit
cod. 3015302202R

Super Short spring
replacement kit
cod. 308574001R

DO NOT USE
ORIGINAL BUSHING

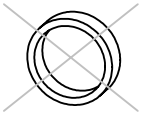

ART. 15312 - SPARE PARTS

HONDA CRF 1100 L AFRICA TWIN/ADVENTURE SPORT/DCT
(fits with original panniers)

A FITTING KIT cod. 3015302601R
B CARBON COVER KIT cod. 3015302001R