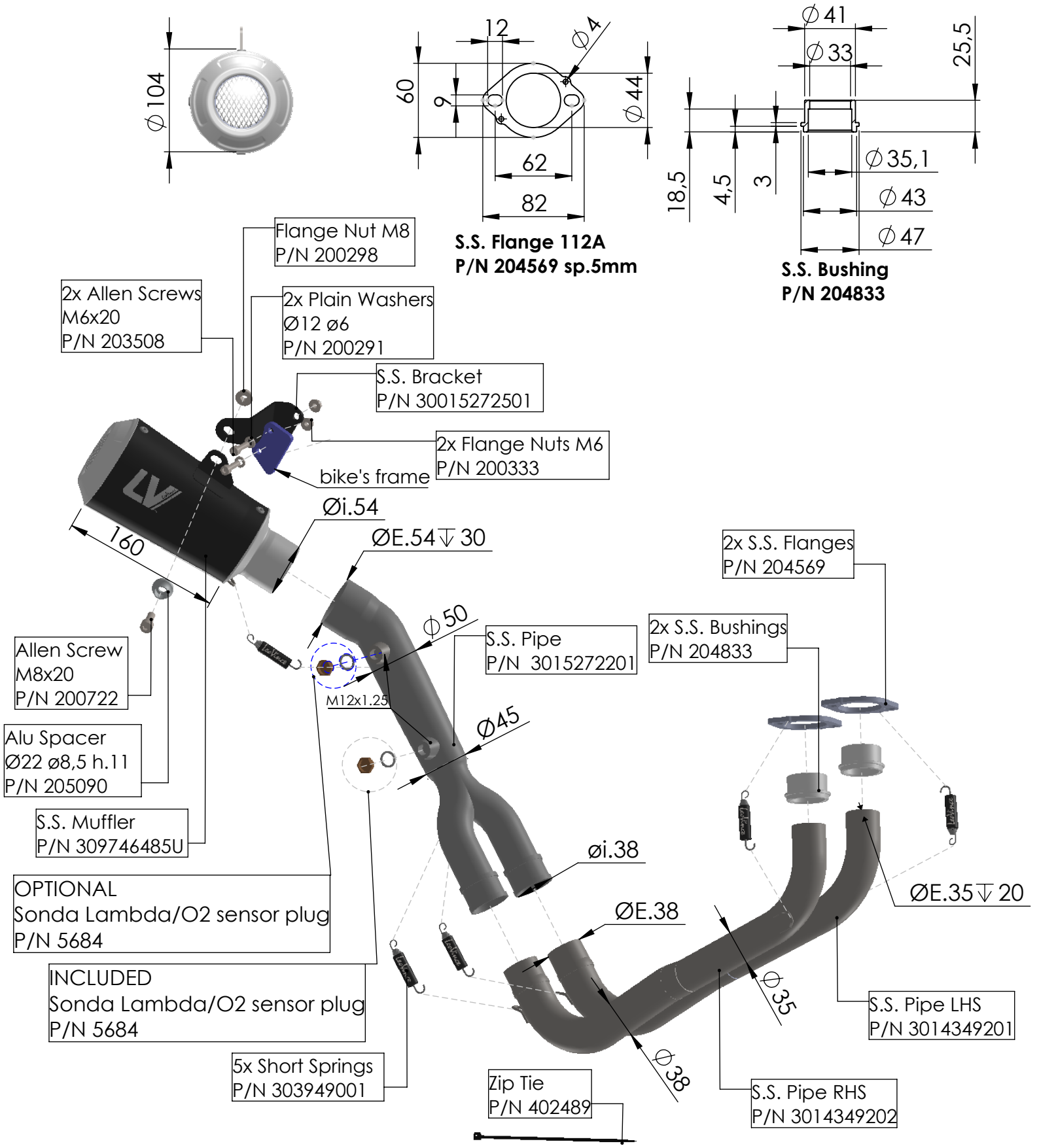

WARNING

ECU must be remapped

ART. 15272BU

YAMAHA MT-07 / XSR 700 / YZF-R7 (also fits on 35kW)

SLIP-ON LV-10 BLACK EDITION