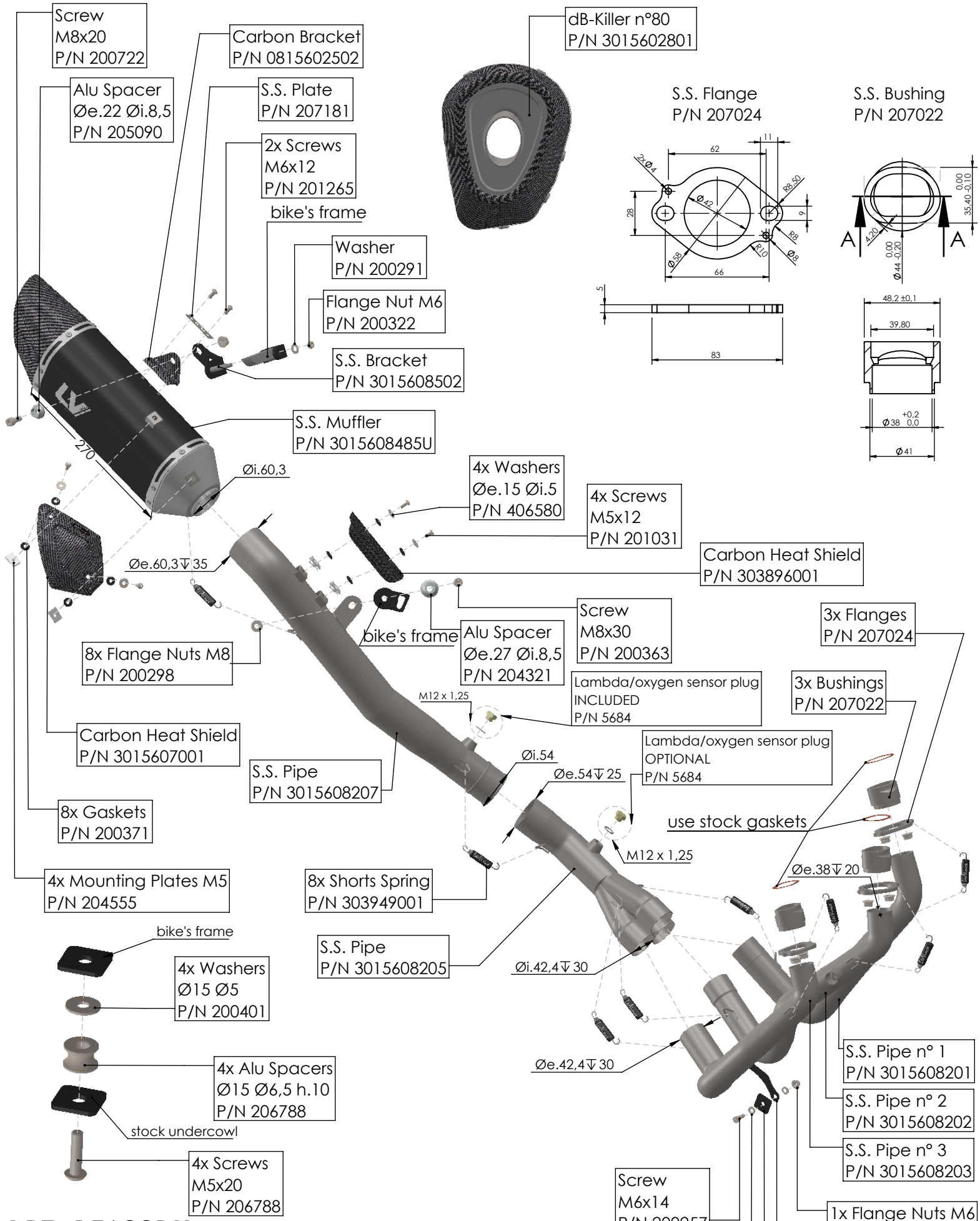

ART. 15608BU

TRIUMPH STREET TRIPLE 765 R/RS

FULL SYSTEM LV-14R BLACK EDITION