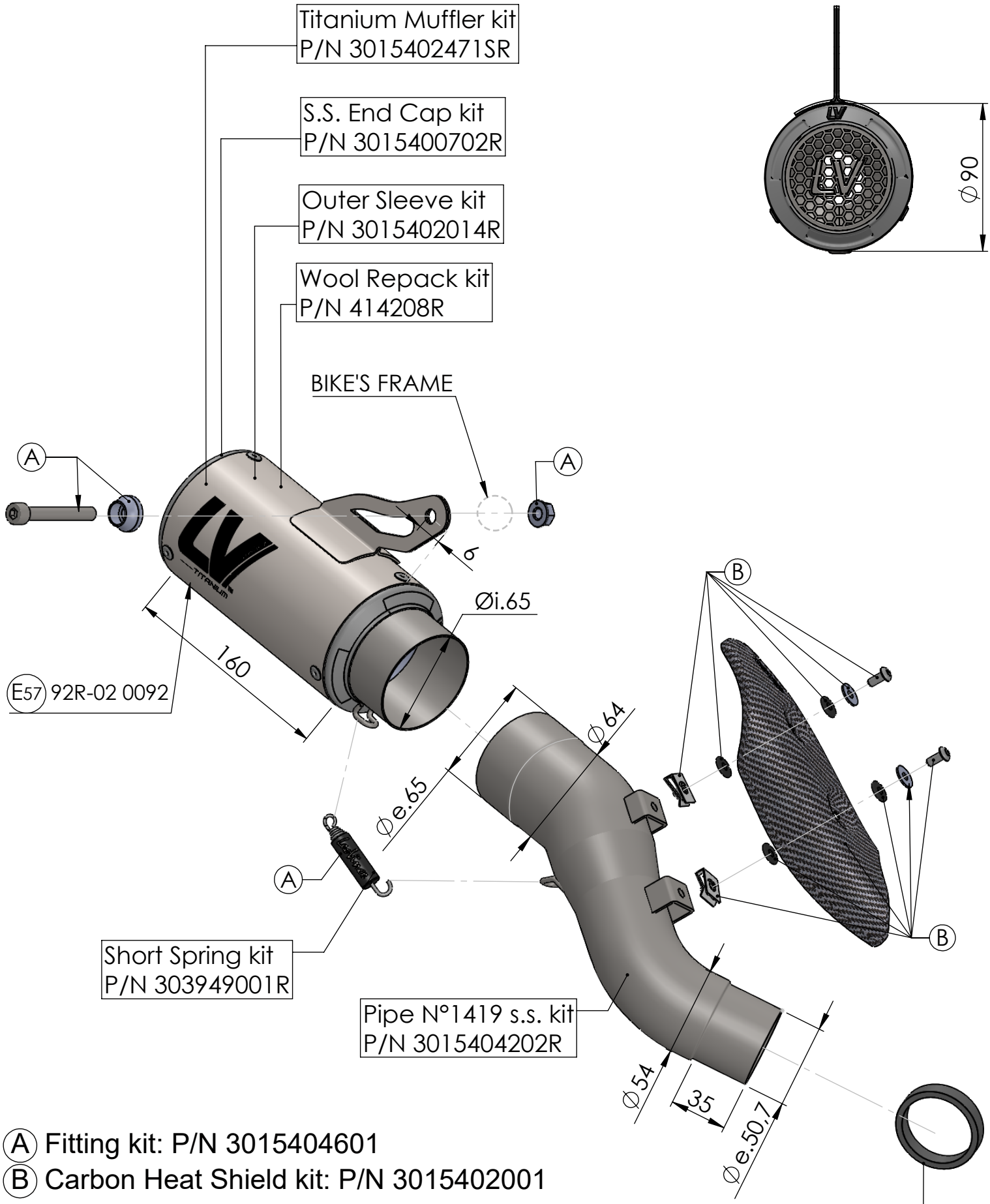

Ⓐ Fitting kit: P/N 3015404601

Ⓑ Carbon Heat Shield kit: P/N 3015402001

USE THE ORIGINAL GRAPHITE BUSHING

ART. 15404ST - SPARE PARTS

KAWASAKI Z 900

SLIP-ON LV CORSA S TITANIUM APPROVED