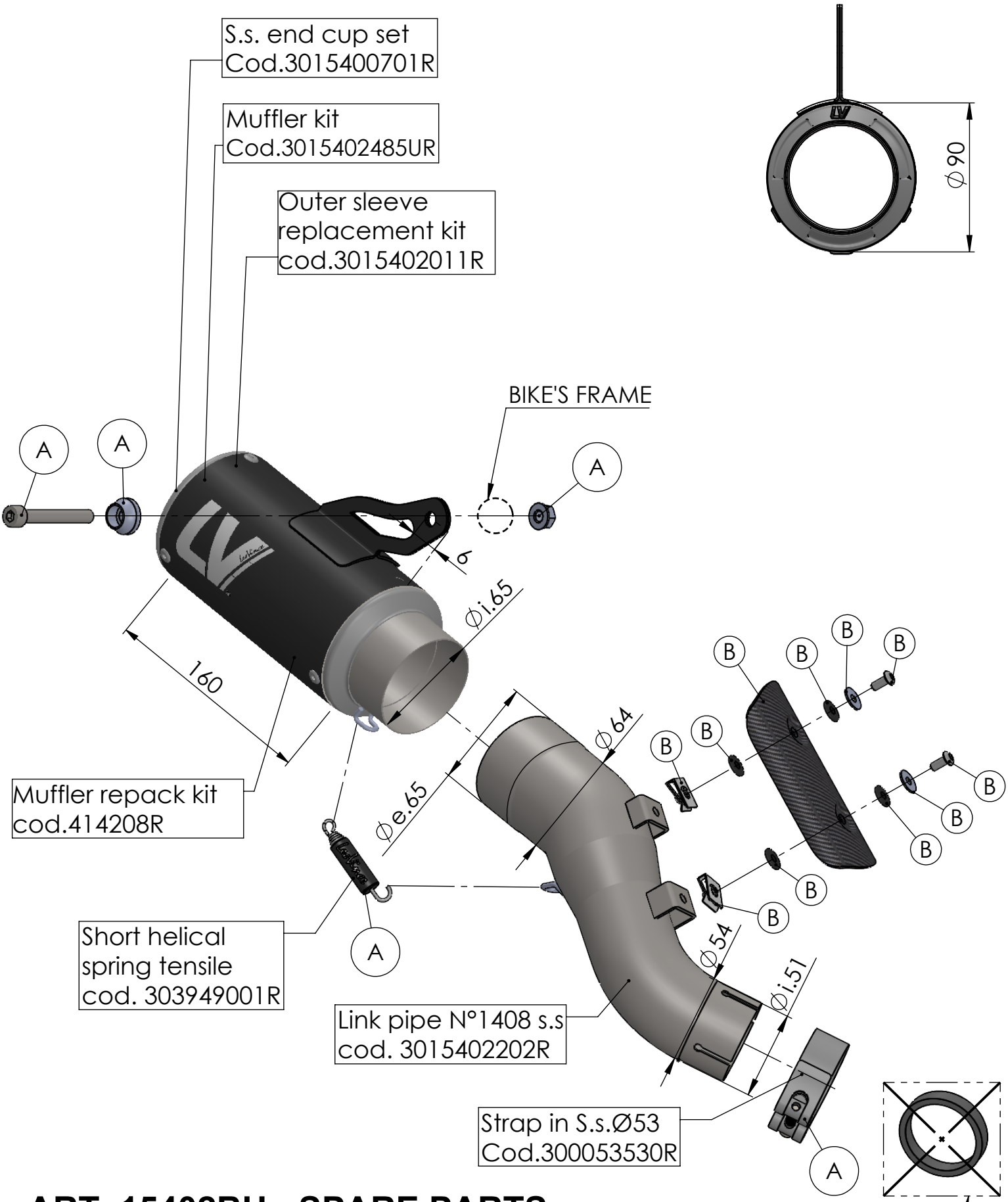

ART. 15402BU - SPARE PARTS

KAWASAKI Z 900 / Z 900 A2
(also fits 35kW & 70kW versions)

(A) FITTING KIT cod.3015402601R
(B) CARBON HEAT SHIELD cod.3015402001R