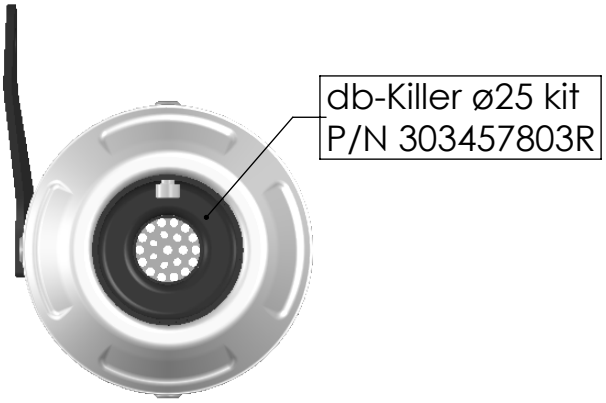

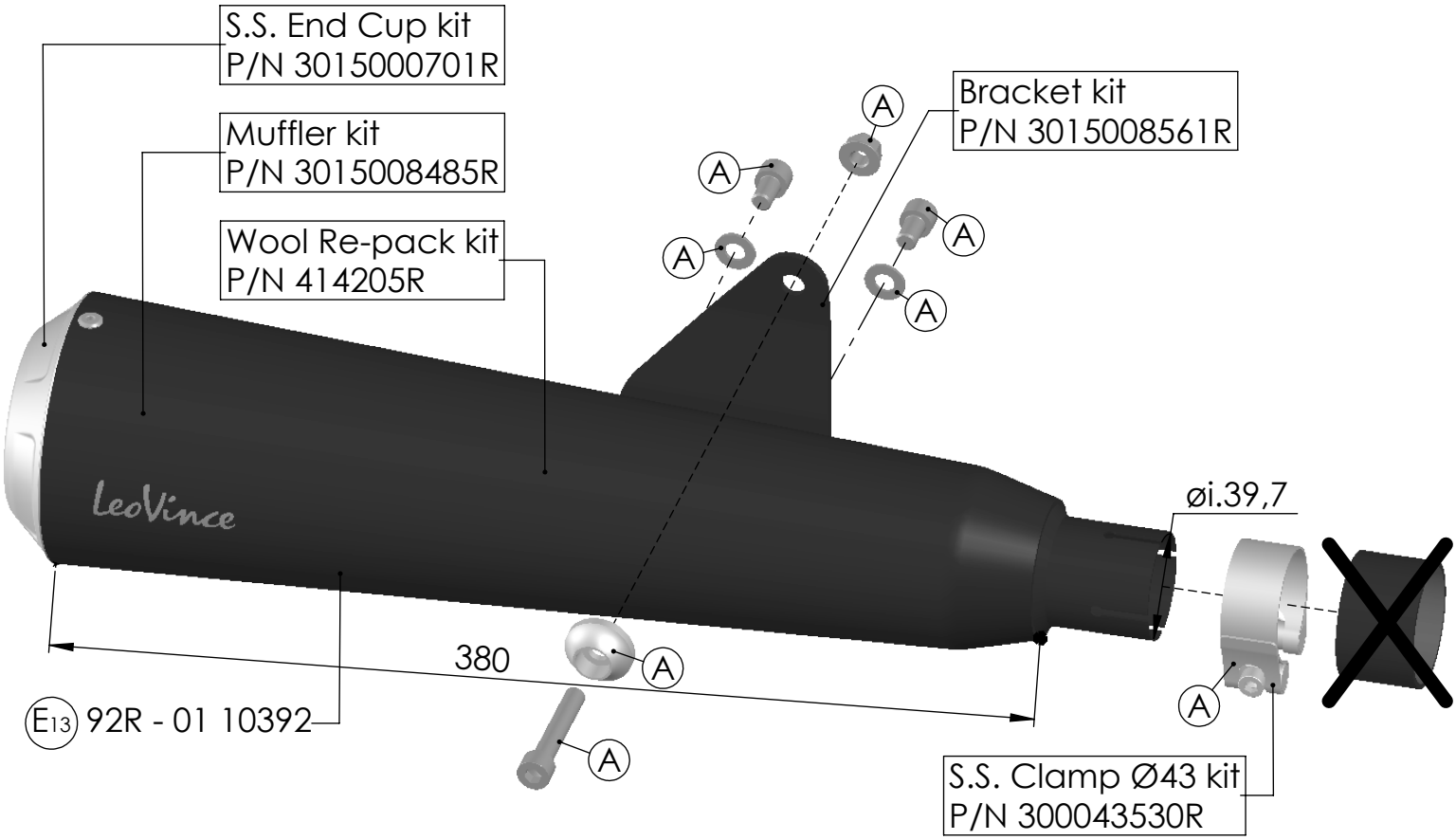

Ⓐ Fitting kit - P/N 3015008601R

ART.15008B - SPARE PARTS

ROYAL ENFIELD CLASSIC 350 / METEOR 350

SLIP-ON - CLASSIC RACER - APPROVED