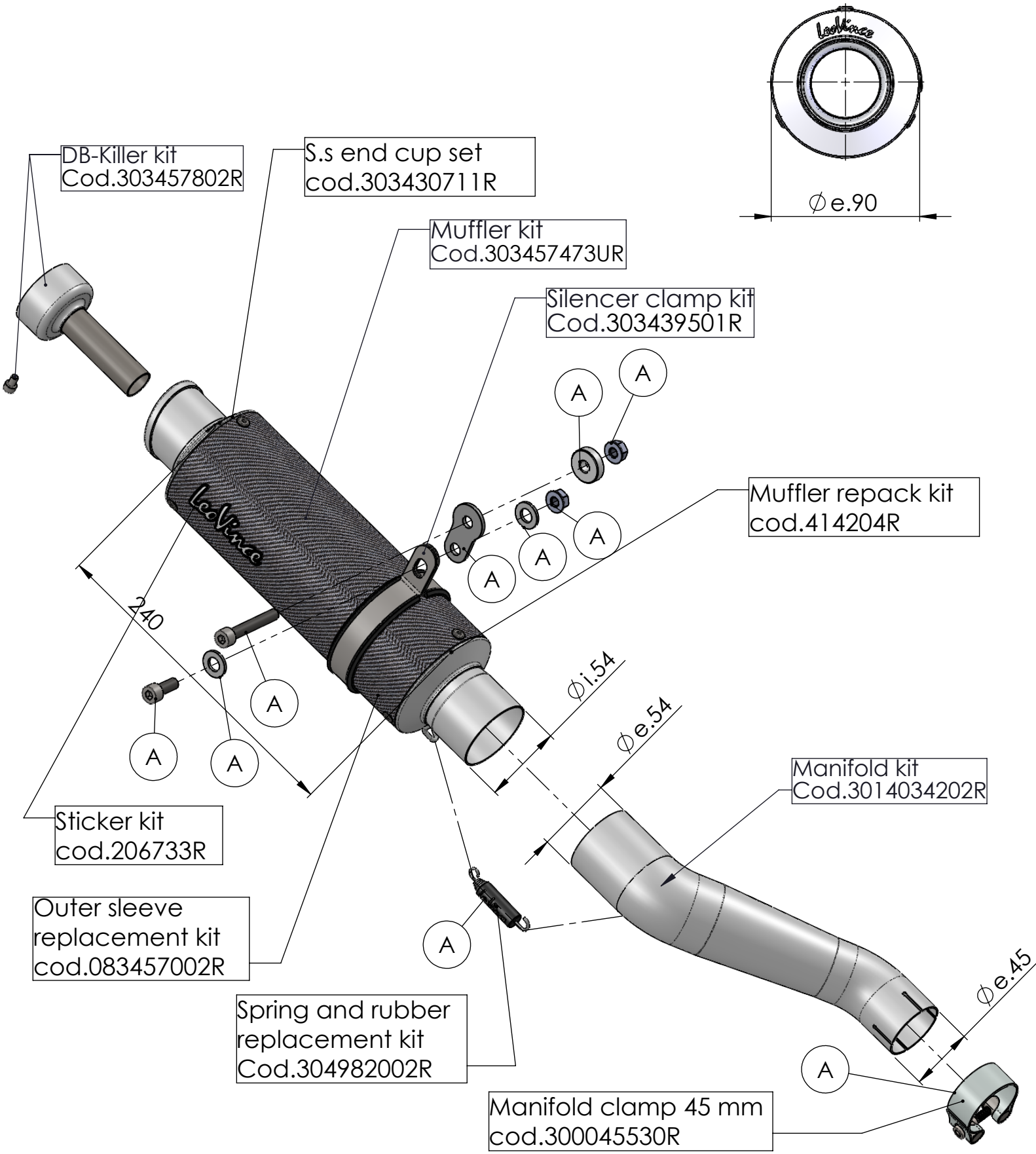

ART. 3384U - SPARE PARTS

HONDA CB 500 F - CBR 500 R
(do not fit with original centre stand)

Ⓐ FITTING KIT cod.303384601R