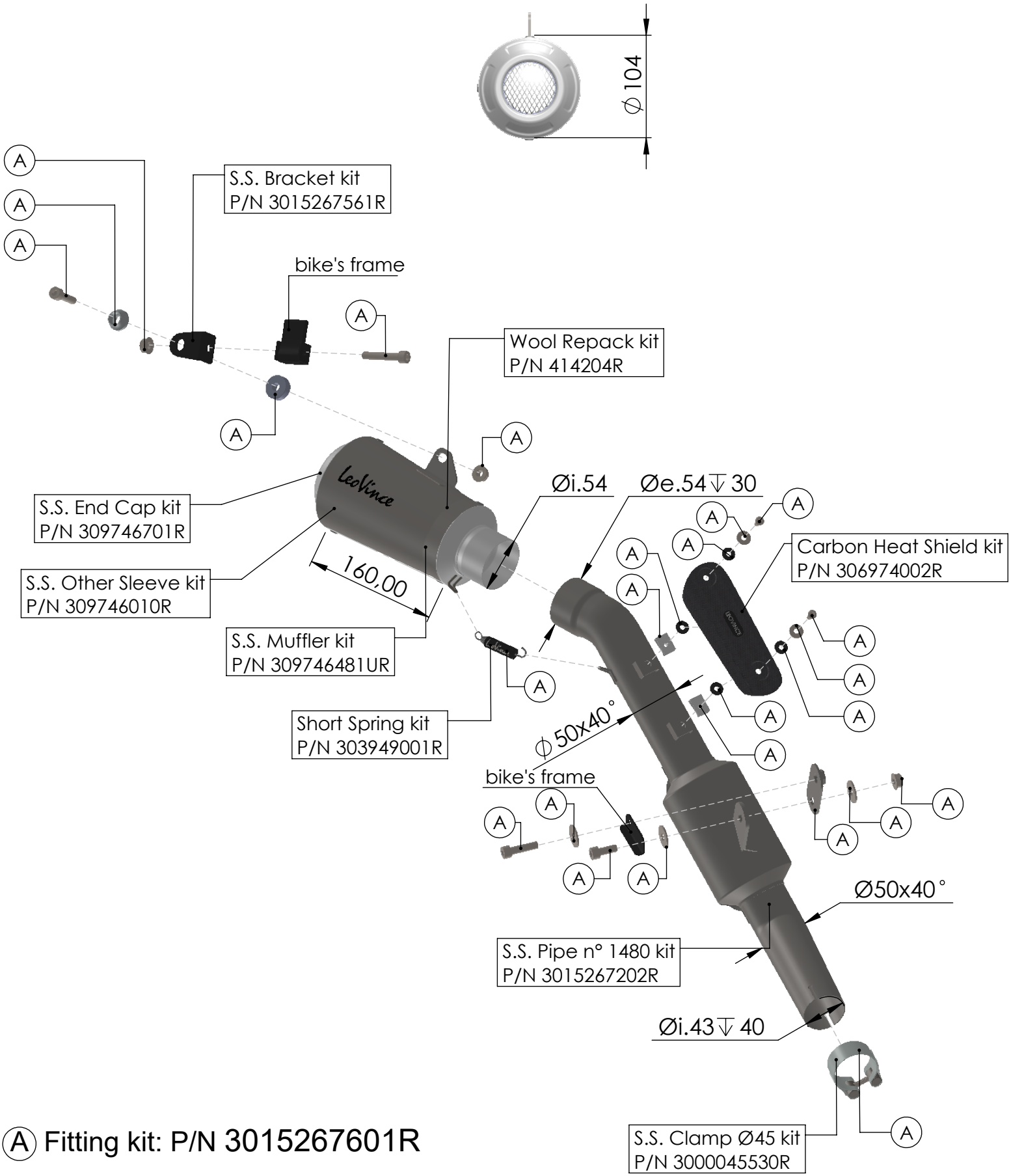

Ⓐ Fitting kit: P/N 3015267601R

ART. 15267U - SPARE PARTS

MOTO MORINI SEIEMMEZZO SCR/STR/A2 (also fits 35kW version)

SLIP-ON LV-10 STAINLESS STEEL