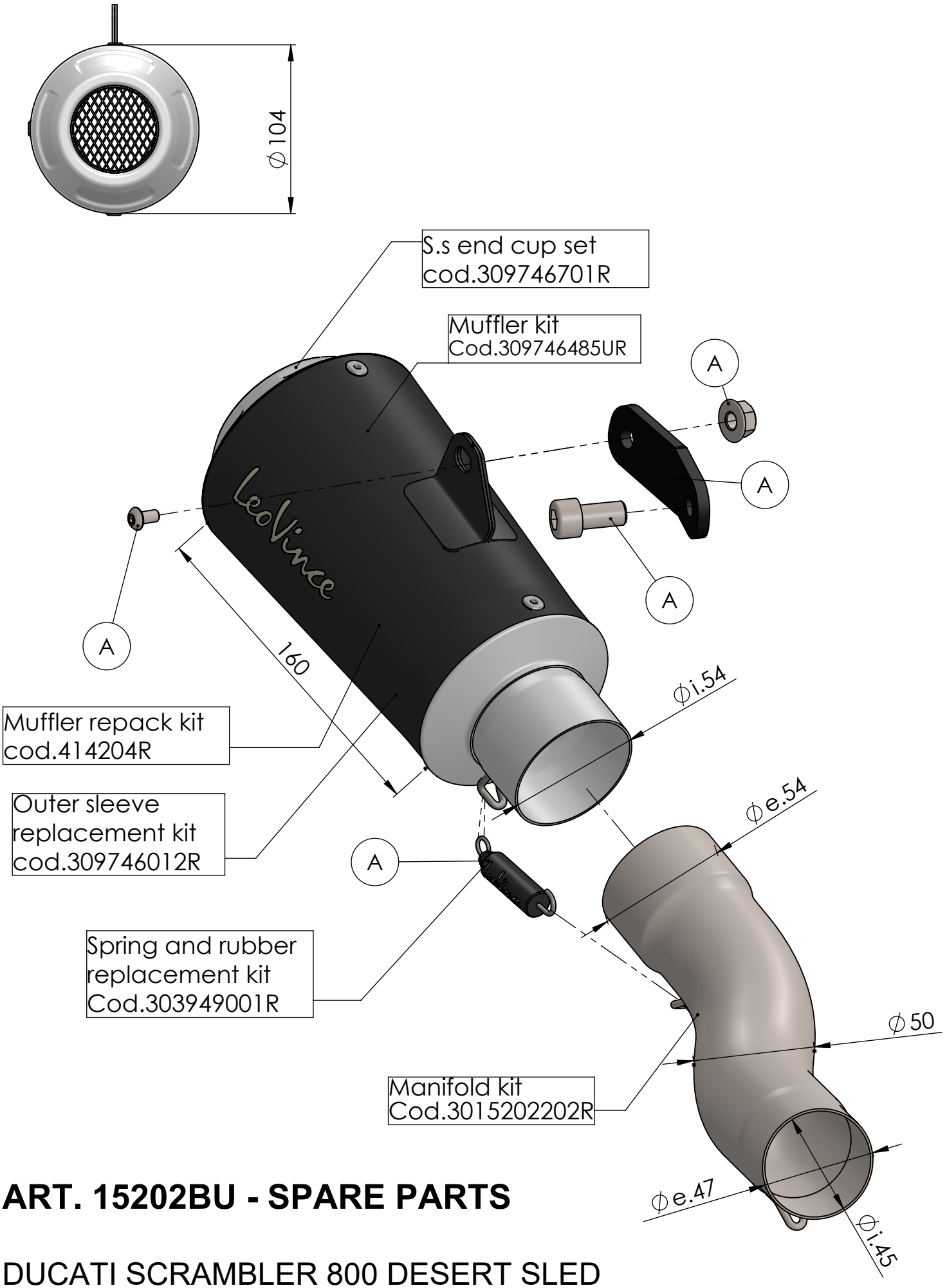

ART. 15202BU - SPARE PARTS

DUCATI SCRAMBLER 800 DESERT SLED

Ⓐ FITTING KIT cod.3015202601R