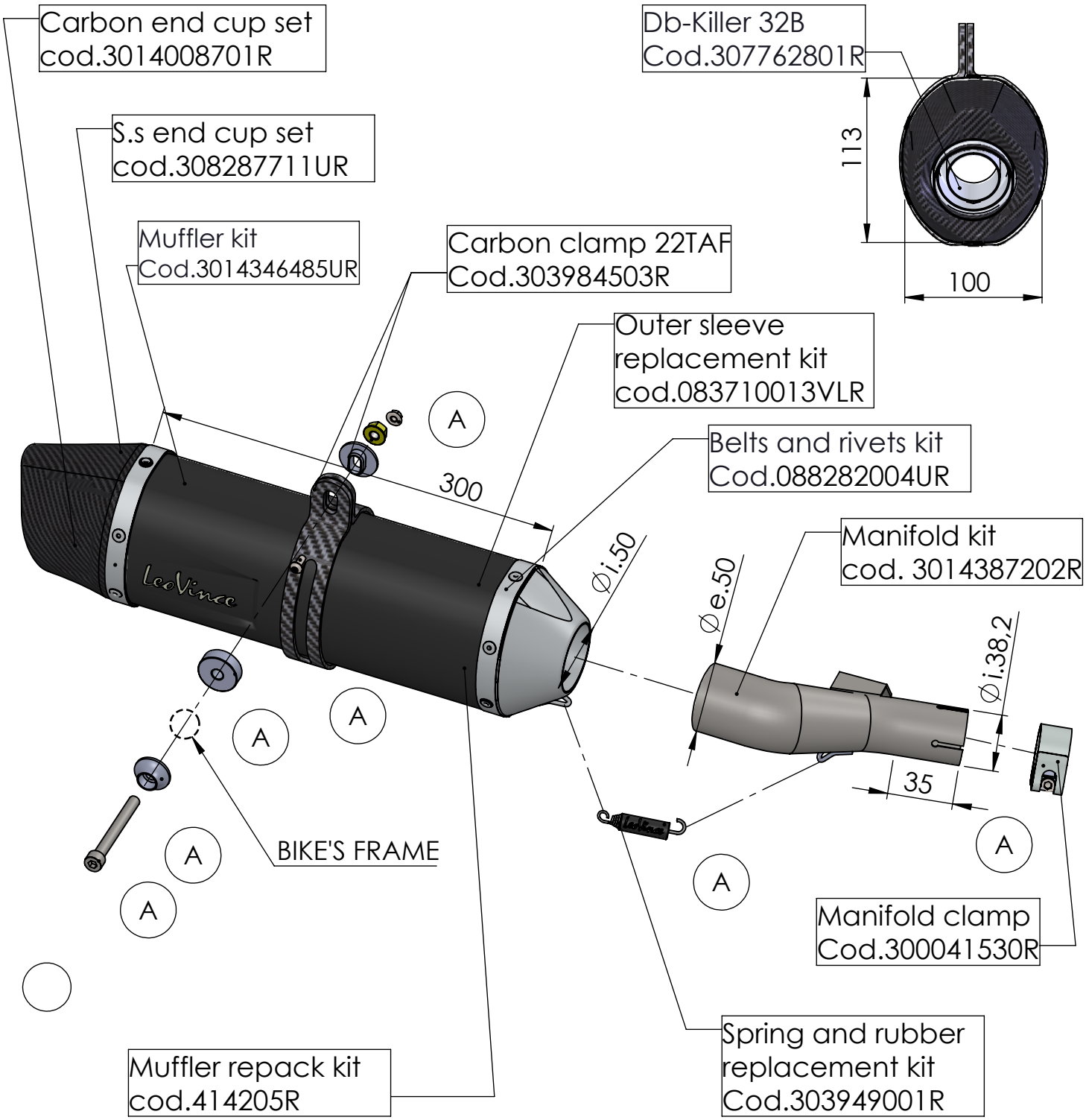

ART. 14387EBU - SPARE PARTS

HONDA NC 750 X (Also fits 35kW version)
(Fits with original panniers) (Fits with original centre stand)

Ⓐ FITTING KIT cod.3014387601R