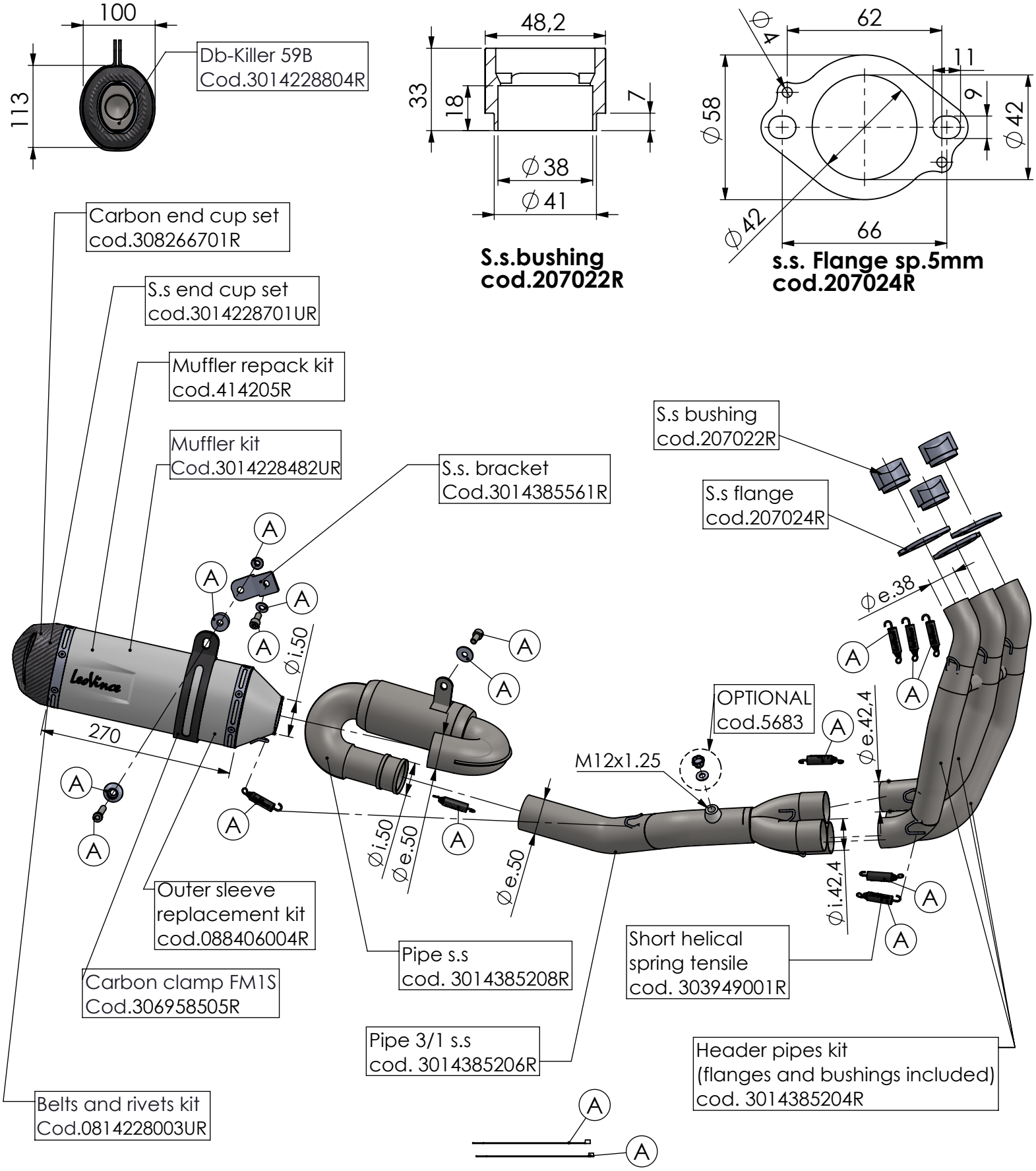

ART. 14385EU - SPARE PARTS

(also fits 35kW version)

TRIUMPH TRIDENT 660 / TIGER 660

Ⓐ FITTING KIT cod.3014385601R