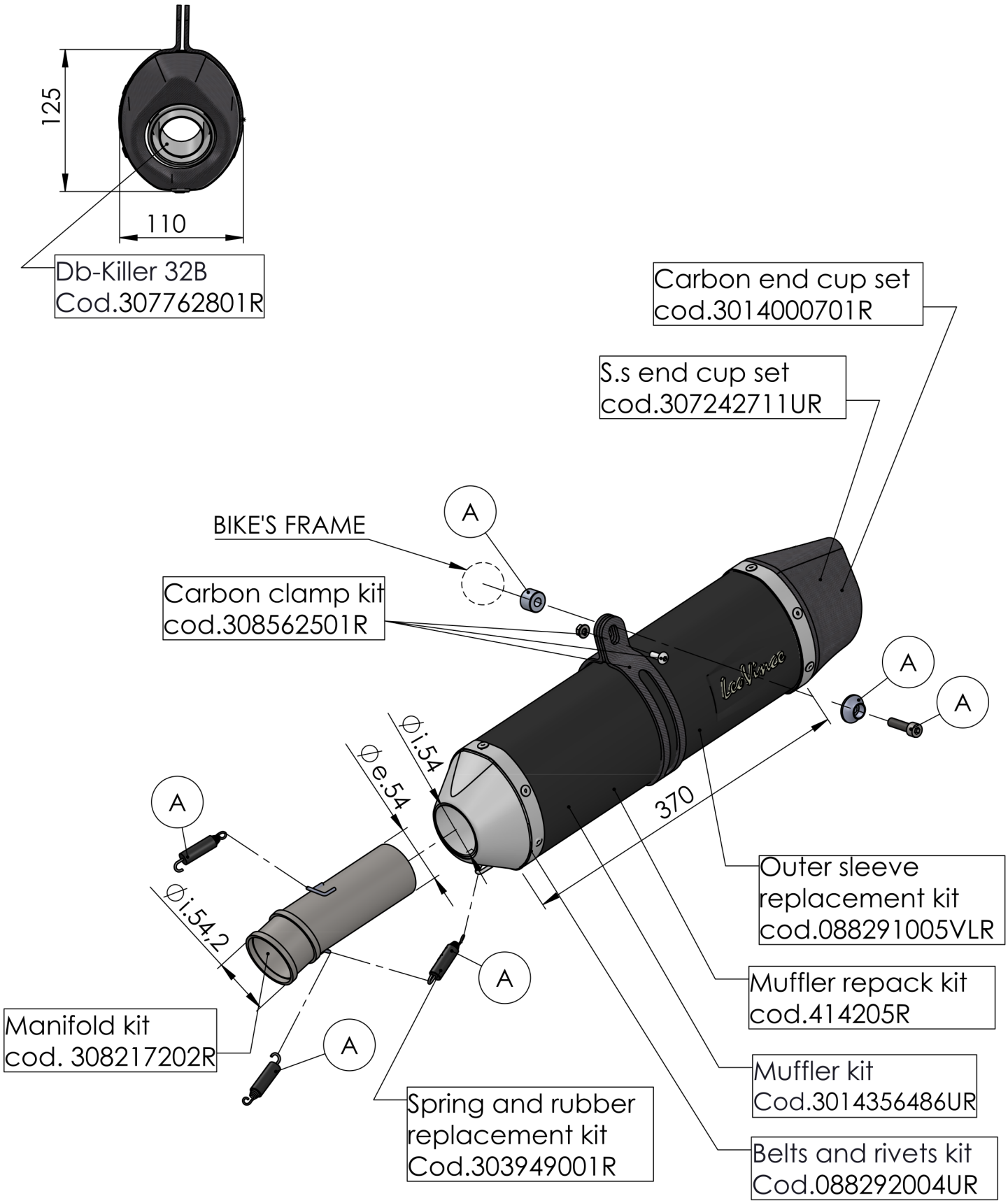


# ART. 14383EBU - SPARE PARTS

BMW F 700 GS / F 800 GS / ADVENTURE
(fits with original panniers) (also fits 35kW versions)

Ⓐ FITTING KIT cod.3014383601R