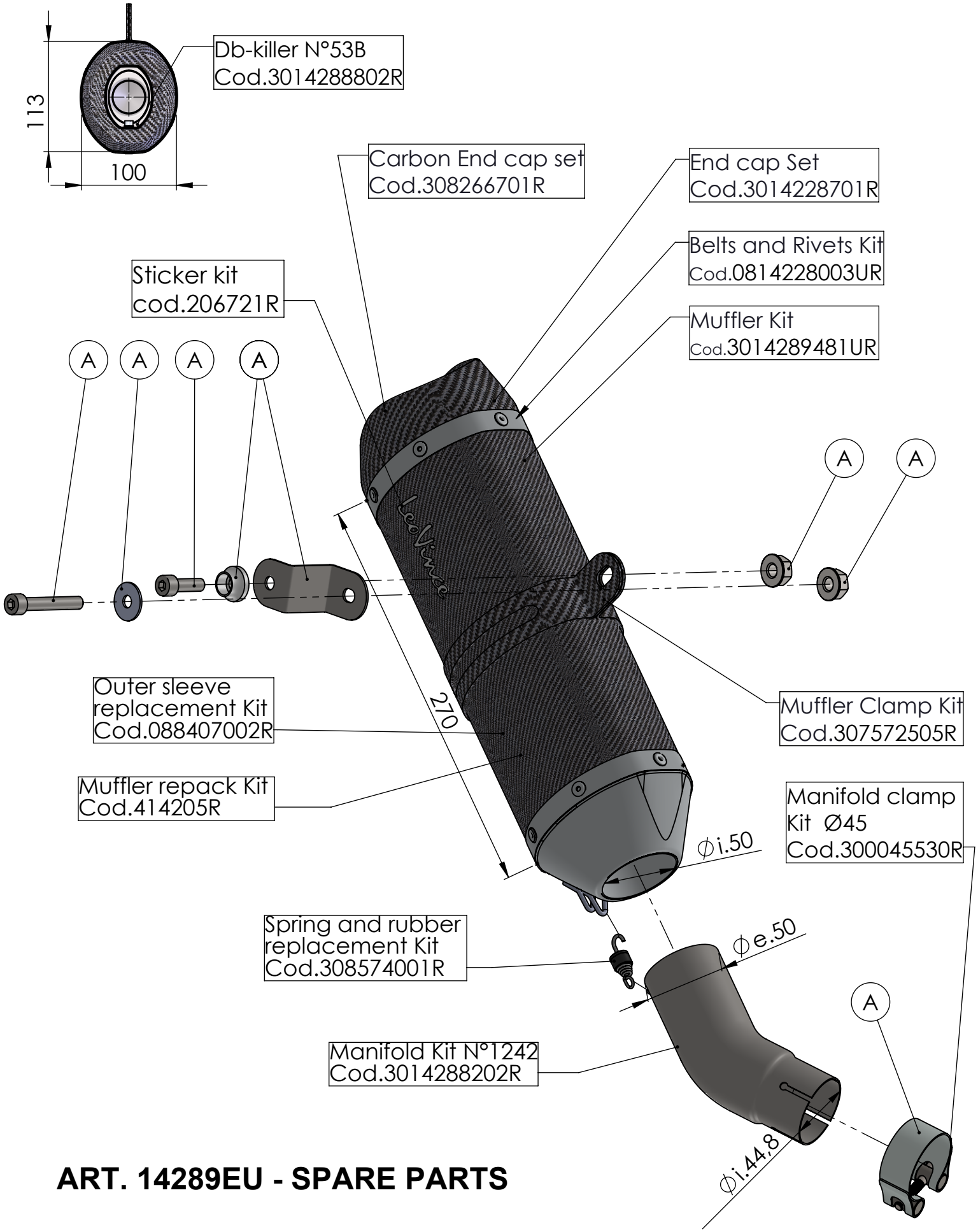

ART. 14289EU - SPARE PARTS

TRIUMPH STREET TRIPLE 765 S/SA2/R/R LRH/RS
(also fits 660cc model, 35/70kW versions)

Ⓐ FITTING KIT Cod.3014288601R