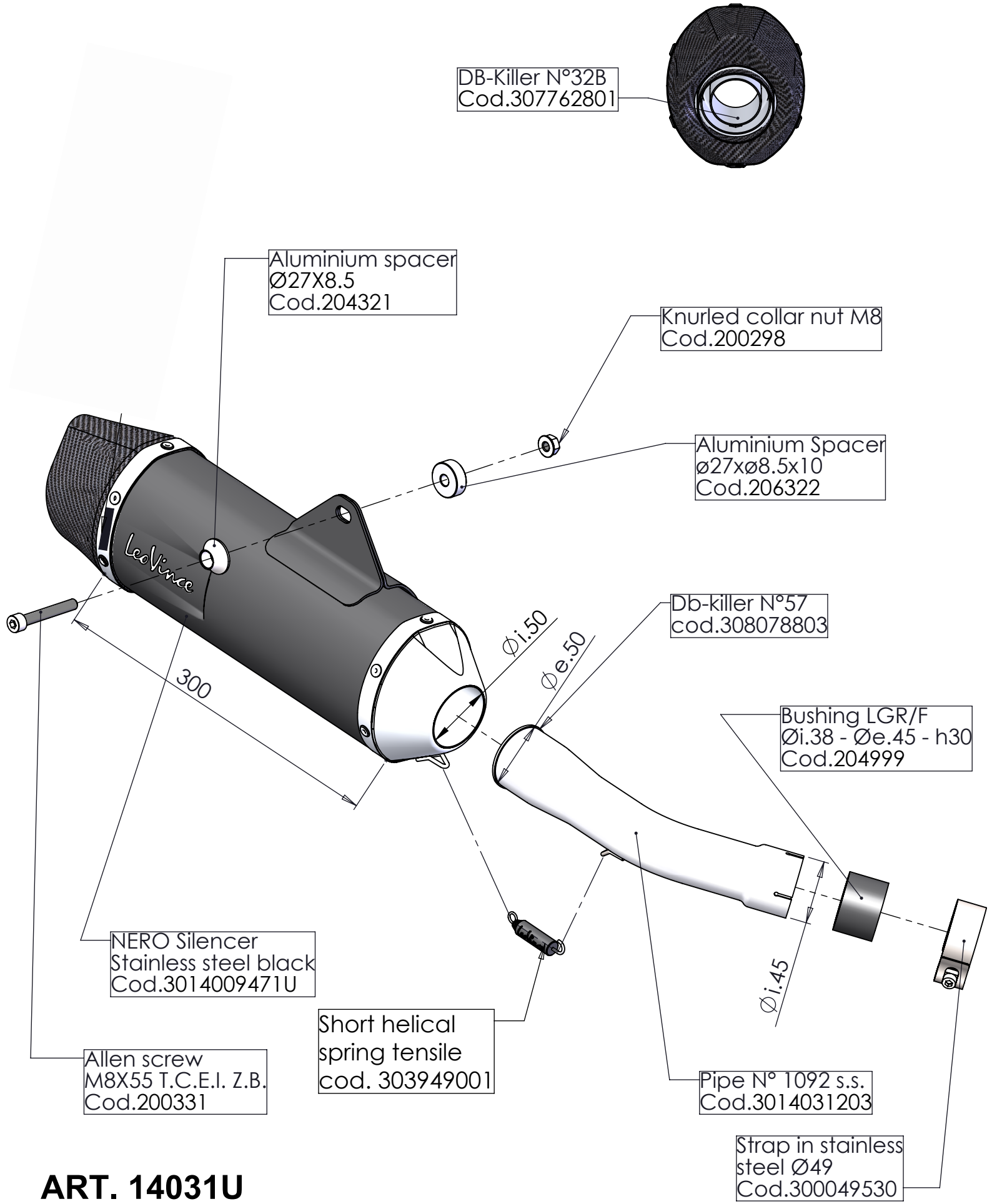

ART. 14031U

SUZUKI SV 650 ABS / SV 650 X ABS (Also fits 35kW versions)

SLIP-ON - NERO - STAINLESS STEEL