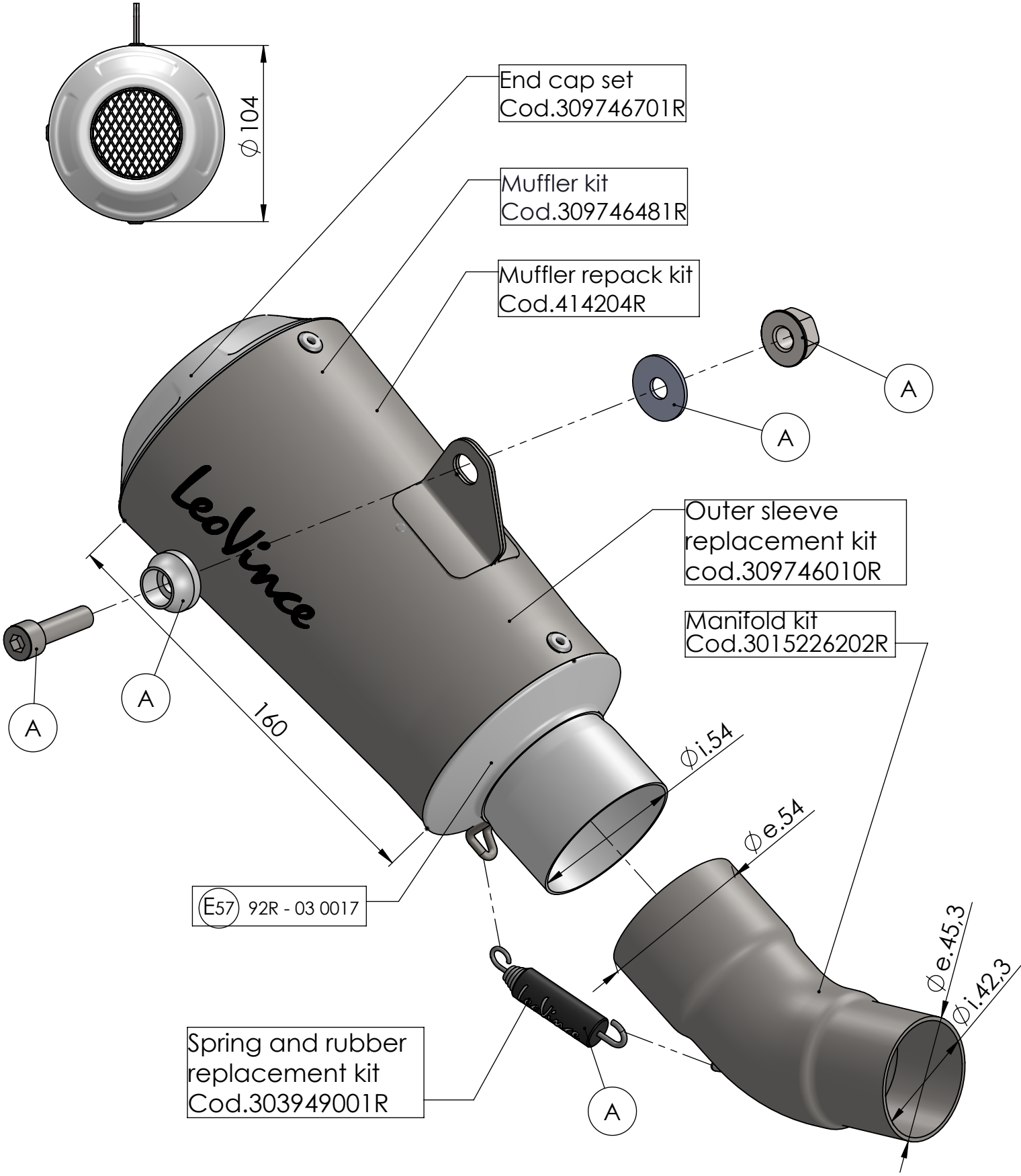

ART. 15226 - SPARE PARTS

BENELLI LEONCINO / TRAIL 500

Ⓐ FITTING KIT Cod. 3015226601R