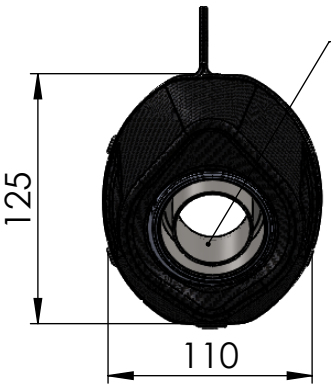


Db-killer N°32B kit
P/N 307762801R

S.S. Muffler kit
P/N 3014414485R

Wool Repack kit
P/N 414205R

Outer Sleeve kit
P/N 088291004VLR

Carbon clamp FB1DS kit
P/N 3014220501R

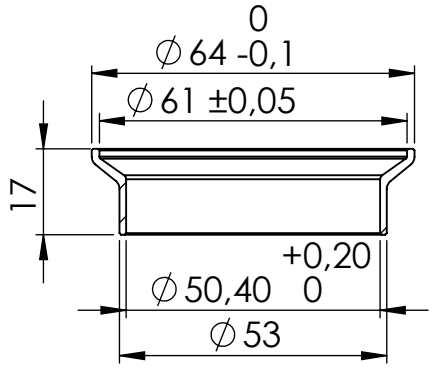


Bushing S.s.
cod.206079

**ATTENTION!**
USE ONLY WITH
CF MOTO 800 MT
ALL VERSION

E13 92R - 02 10399

bike's frame

Carbon bracket kit
P/N 3014414561R

Øi.50

370

S.S. Pipe N°1481 kit
P/N 3014414204R

Øe.50↓35

∅50

Belts and Rivets kit
P/N 088425010R

S.S. End Cap kit
P/N 307242711R

Short Spring kit
P/N 303949001R

Carbon End Cap kit
P/N 3014000701R

Carbon cover kit
P/N 0814414001

A Fitting kit: P/N 3014414601R
B Head Shield kit: P/N 3014414001R

# ART. 14414EB - SPARE PARTS

CFMOTO 800 MT SPORT/TOURING/EXPLORE/LIMITED EDITION / 800 MT-X - HUSQVARNA NORDEN 901 - KTM 790 ADVENTURE / R - 890 ADVENTURE/L(A2)/R/RALLY - KTM 890 SMT
(also fits 35Kw version)

SLIP-ON LV ONE EVO BLACK EDITION APPROVED