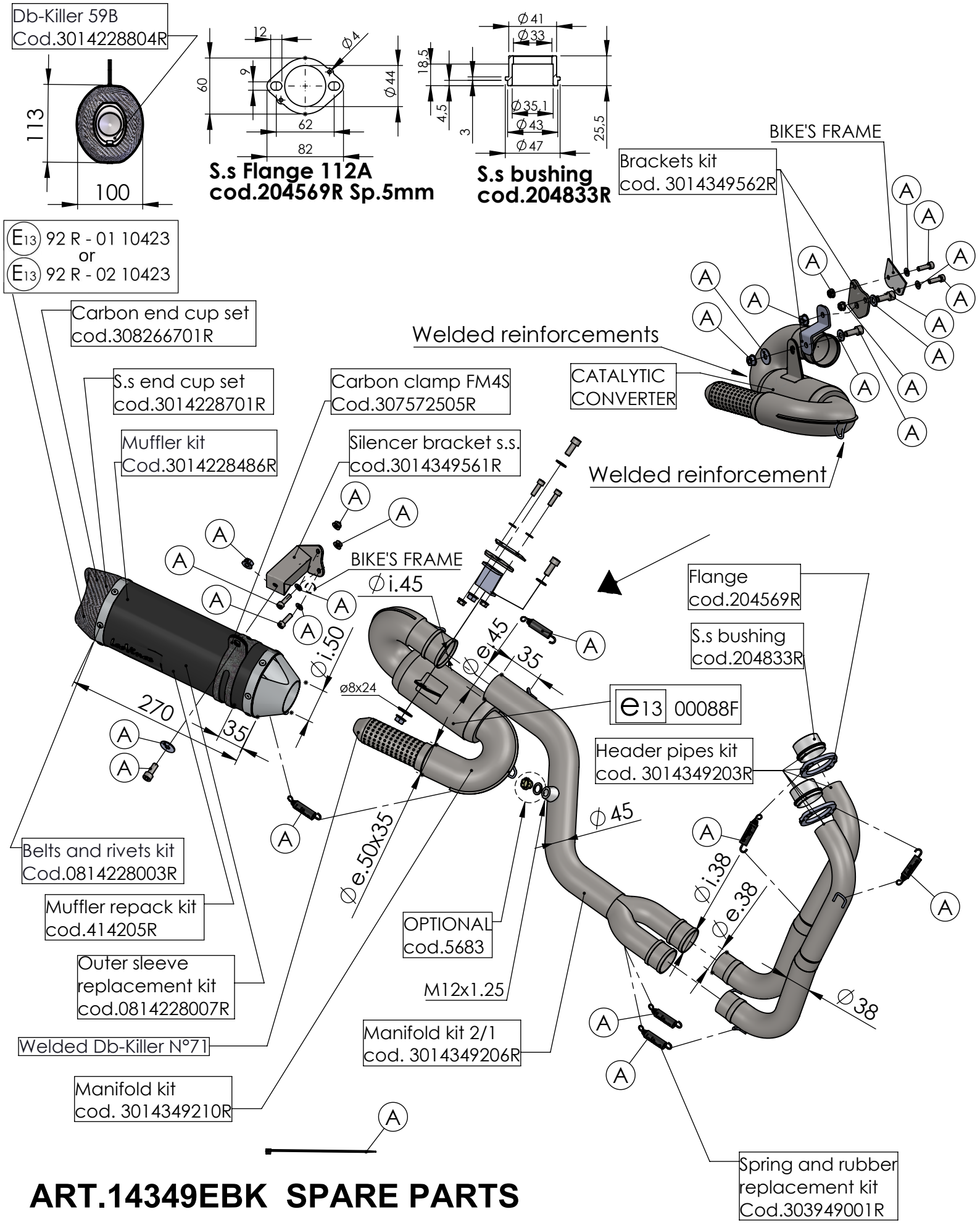

ART.14349EBK SPARE PARTS

YAMAHA TRACER 7 / TRACER 7 GT

(Also fits 35 kW version) (Fits with original panniers) (Fits with orginal centre stand)

(A) FITTING COD. 3014349601R